AquaSnap® 30RB060-390 Air-Cooled Chillers and 30RB080-390 Air-Cooled Chillers with Greenspeed® Technology

Installation Instructions

CONTENTS

Page

SAFETY CONSIDERATIONS 1,2
INTRODUCTION 2
INSTALLATION 2-73
Storage 2
Step 1 — Place, Rig and Mount Unit 2
- PLACING UNIT
- MOUNTING UNIT
- RIGGING UNIT

Step 2 — Remove Compressor Rack Holddown Bolts 38
Step 3 — Remove Compressor Shipping Braces 38
- FOR UNITS WITH COMPRESSOR SOUND BLANKETS

Step 4 — Make Cooler Fluid, Heat Reclaim and Drain Piping Connections 38
- FREEZE PROTECTION
- UNITS WITH HYDRONIC PUMP PACKAGE
- UNITS WITHOUT HYDRONIC PUMP PACKAGE
- UNITS WITH OPTIONAL HEAT RECLAIM
- HEAD PRESSURE CONTROL
- FOR ALL UNITS

Step 5 — Fill the Chilled Water and Heat Reclaim Loop 44
- WATER SYSTEM CLEANING
- WATER TREATMENT
- SYSTEM PRESSURIZATION
- FILLING THE SYSTEM(S)
- SET WATER FLOW RATE
- PUMP MODIFICATION/TRIMMING
- PUMP VFD
- SENSORLESS CONTROL (CLOSED LOOP)
- REMOTE SENSOR (CLOSED LOOP)
- REMOTE CONTROLLER (OPEN LOOP)
- PREPARATION FOR YEAR-ROUND OPERATION
- FREEZE PROTECTION
- PREPARATION FOR WINTER SHUTDOWN
- CHILLED WATER SYSTEM
- HEAT RECLAIM SYSTEM

Step 6 — Make Electrical Connections 57
- POWER SUPPLY
- POWER WIRING
- CONTROL POWER
- FIELD CONTROL OPTION WIRING
- DUAL CHILLER CONTROL OPTION
- CARRIER COMFORT NETWORK® COMMUNICATION BUS WIRING
- NON-CCN COMMUNICATION WIRING

Step 7 — Install Accessories 70
- NAVIGATOR™ DISPLAY
- REMOTE ENHANCED DISPLAY
- LOW AMBIENT TEMPERATURE OPERATION
- MINIMUM LOAD ACCESSORY
- UNIT SECURITY/PROTECTION ACCESSORIES
- COMMUNICATION ACCESSORIES
- SERVICE OPTIONS

Page

Refrigerant Circuit 71
- LEAK TESTING
- DEHYDRATION
- REFRIGERANT CHARGE

BACnet Communication Option Wiring 71

SAFETY CONSIDERATIONS

Installing, starting up, and servicing air-conditioning equipment can be hazardous due to system pressures, electrical components, and equipment location.

Only trained, qualified installers and service mechanics should install, start up, and service this equipment.

Untrained personnel can perform basic maintenance functions such as cleaning coils. All other operations should be performed by trained service personnel.

When working on the equipment, observe precautions in the literature and on tags, stickers, and labels attached to the equipment.

- Follow all safety codes.
- Keep quenching cloth and fire extinguisher nearby when brazing.
- Wear safety glasses and work gloves.
- Use care in handling, rigging, and setting bulky equipment.

⚠ WARNING

Electrical shock can cause personal injury and death. Shut off all power to this equipment during installation. There may be more than one disconnect switch. Tag all disconnect locations to alert others not to restore power until work is completed.

IMPORTANT: This equipment generates, uses, and can radiate radio frequency energy and if not installed and used in accordance with these instructions may cause radio interference. It has been tested and found to comply with the limits of a Class A computing device pursuant to International Standard in North America EN 61000-2/3, which are designed to provide reasonable protection against such interference when operated in a commercial environment.

⚠ CAUTION

This system uses Puron® refrigerant (R-410A), which has higher pressures than R-22 and other refrigerants. No other refrigerant can be used in this system. Failure to use gage set, hoses, and recovery systems designed to handle Puron refrigerant (R-410A) may result in equipment damage or personal injury. If unsure about equipment, consult the equipment manufacturer.

Manufacturer reserves the right to discontinue, or change at any time, specifications or designs without notice and without incurring obligations.

⚠ WARNING

DO NOT USE TORCH to remove any component. System contains oil and refrigerant under pressure.

To remove a component, wear protective gloves and goggles and proceed as follows:

a. Shut off electrical power to unit.
b. Recover refrigerant to relieve all pressure from system using both high-pressure and low pressure ports.
c. Traces of vapor should be displaced with nitrogen and the work area should be well ventilated. Refrigerant in contact with an open flame produces toxic gases.
d. Cut component connection tubing with tubing cutter and remove component from unit. Use a pan to catch any oil that may come out of the lines and as a gage for how much oil to add to the system.
e. Carefully unsweat remaining tubing stubs when necessary. Oil can ignite when exposed to torch flame.

Failure to follow these procedures may result in personal injury or death.

⚠ CAUTION

DO NOT re-use compressor oil or any oil that has been exposed to the atmosphere. Dispose of oil per local codes and regulations. DO NOT leave refrigerant system open to air any longer than the actual time required to service the equipment. Seal circuits being serviced and charge with dry nitrogen to prevent oil contamination when timely repairs cannot be completed. Failure to follow these procedures may result in damage to equipment.

INTRODUCTION

These instructions cover installation of 30RB060-390 air-cooled liquid chillers with electronic controls and units with factory-installed options (FIOPs). See Fig. 1.

NOTE: The 30RB080-390 air-cooled chillers with Greenspeed® technology include high-efficiency variable condenser fans. See Fig. 1.

NOTE: Unit sizes 315-390 are modular units that are shipped in separate sections as modules A or B as noted in position 8 of the unit model nomenclature. Installation directions specific to these units are noted in these instructions. For modules 315A, 315B, 330A, 330B, 345A, 345B, and 360B, follow all general instructions as noted for unit sizes 30RB160-170. For modules, 360A, 390A, and 390B follow instructions for 30RB190. See Table 1 for a listing of unit sizes and modular combinations.

NOTE: The nameplate for modular units contains only the first two digits in the model number. For example, 315A and 315B nameplates read 31A and 31B.

Table 1 — Modular Combinations

MODULE UNITS	MODULE A	MODULE B
30RBF315	30RBF160	30RBF160
30RBF330	30RBF170	30RBF160
30RBF345	30RBF170	30RBF170
30RBF360	30RBF190	30RBF170
30RBF390	30RBF190	30RBF190

NOTE: An “F” in the model number indicates the design series.

INSTALLATION

Storage — If the unit is to be stored for a period of time before installation or start-up, be sure to protect the machine from construction dirt and moisture. Keep protective shipping covers in place until machine is ready for installation.

Step 1 — Place, Rig and Mount the Unit

NOTE: Inspect the unit upon arrival for damage. If damage is found, file a claim right away with the shipping company.

PLACING UNIT — When considering location for the unit, be sure to consult National Electrical Code (NEC, U.S.A.) and local code requirements. Allow sufficient space for airflow, wiring, piping, and service. See Fig. 2-20. Be sure surface beneath the unit is level, and is capable of supporting the operating weight of the unit. See Fig. 21 and Tables 2-4B for unit lifting points, mounting and operating weights.

Locate the unit so that the condenser airflow is unrestricted both above and on the sides of the unit. Airflow and service clearances are 6 ft (1.8 m) around the unit. Acceptable clearance on the cooler connection side or end opposite the control box unit can be reduced to 3 ft (1 m) without sacrificing performance as long as the remaining three sides are unrestricted. Acceptable clearance on the side with a control box can be reduced to 4 ft (1.3 m) due to NEC regulations, without sacrificing performance as long as the remaining three sides are unrestricted. Provide ample room for servicing and removing cooler. See Fig. 2-20 for required clearances. Local codes for clearances take precedence over the manufacturer’s recommendations when local codes call for greater clearances.

Modular units (30RB315-390) must be installed with a minimum separation end to end of 4 ft (1.3 m) for airflow and service clearance along with NEC regulations.

If multiple units are installed at the same site, a separation of 10 ft (3 m) between the sides of the machines is required to maintain proper airflow and minimize the chances of condenser air recirculation.

MOUNTING UNIT — The unit may be mounted on a level pad directly on the base rails, on rails along the long axis of the machine, or on vibration isolation springs. For all units, ensure placement area is strong enough to support unit operating weight. Mounting holes are provided for securing the unit to the pad or vibration isolation springs. The base rail can be point loaded at the mounting points. The base rail is made from steel, which is formed into what is shown in Fig. 22. See Fig. 2-20 for locations of mounting points. At the mounting points, a U-shaped channel is welded into the base rail to provide a flat plate for mounting. See Fig. 23 for mounting plate dimensions. The $1^{9}/_{16}$ in. (40 mm) dimension shown is to the mounting hole from the outside edge of the rail.

NOTE: The $1^{9}/_{16}$ in. (40 mm) dimension in Fig. 23 is not the same dimension as the 1.42 in. (36 mm) flange that is turned under the base rail in Fig. 22.

Bolt the unit securely to pad or rails. If vibration isolators (field-supplied) are required for a particular installation, refer to unit weight distribution in Fig. 21 to aid in the proper selection of isolators. The 30RB units can be mounted directly on spring isolators. For each unit or module, the final unit location must be level so that oil will equalize properly.

RIGGING UNIT — The 30RB060-390 units are designed for overhead rigging and it is important that this method be used. Holes are provided in frame base channels, marked for rigging (see rigging label on unit). It is recommended that field-supplied shackles be used to facilitate lifting. Secure the shackles to the base rails at the points noted on the rigging label. See Table 2 for the number of lifting points for each unit.

Do not use a forklift truck to move the units.

Table 2 — Number of Lifting Points

30RB	NUMBER OF LIFTING POINTS
060-110	4
120-150	6
160-300	8
315A, 315B, 330A, 330B, 345A, 345B, 360A	6
360B, 390A, 390B	8

Use spreader bars to keep cables or chains clear of unit sides. As further protection plywood sheets may be placed against sides of unit, behind cables or chains. Run cables or chains to a central suspension point so that angle from horizontal is not less than 45 degrees. Raise and set unit down carefully. See Fig. 24 and 25 for rigging centers of gravity.

Each module of the 30RB315-390 units must be rigged separately. When placing unit modules for unit sizes 315-390, make sure modules are placed to permit access to the control boxes for each module.

For shipping, some domestic units and all export units are mounted on a wooden skid under entire base of unit. Skid can be removed before unit is moved to installation site. Lift the unit from above to remove skid. See Fig. 24 and 25 for rigging center of gravity. On export units, the top skid can be used as the spreader bars. If the unit was shipped with a shipping bag, the bag must be removed to gain access to the rigging holes in the base rail. On export units with a full crate, the crate sides must be removed to aid in rigging.

If overhead rigging is not available, the unit can be moved on rollers or dragged. When unit is moved on rollers, the unit skid, if equipped, must be removed. To lift the unit, use jacks at the rigging points. Use a minimum number of rollers to distribute the load such that the rollers are no more than 6 feet (1.8 m) apart. If the unit is to be dragged, lift the unit as described above, and place unit on a pad. Apply moving force to the pad, and not the unit. When in its final location, raise the unit and remove the pad.

If the unit was shipped with coil protection, it must be removed before start-up. The shipping bag for export units must be removed before start-up.

NOTE: If the application includes a remote-mounted cooler option, follow the instructions included with the accessory for cooler placement and refrigerant piping.

30RB F 190 6 - 8 0 - - - L

30RB – Air-Cooled AquaSnap® Chiller

Design Series

Nominal Sizes

060	110	170	275	360*
070	120	190	300	390*
080	130	210	315*	
090	150	225	330*	
100	160	250	345*	

Voltage

1 – 575-3-60
2 – 380-3-60
5 – 208/230-3-60
6 – 460-3-60

Condenser Coil Options

- – Aluminum Fin/Copper Tube
0 – Copper Fin/Copper Tube
1 – Aluminum Pre-Coat Fin/Copper Tube
2 – Aluminum E-Coat Fin/Copper Tube
3 – Copper E-Coat Fin/Copper Tube
4 – Microchannel (MCHX)
5 – E-Coat, Microchannel (MCHX)

Hydronics Option

- – No Pump Installed
0 – Single Pump, 3 HP
1 – Single Pump, 5 HP
2 – Single Pump, 7.5 HP
3 – Single Pump, 10 HP
4 – Single Pump, 15 HP
6 – Dual Pump, 3 HP
7 – Dual Pump, 5 HP
8 – Dual Pump, 7.5 HP, Low Head
9 – Dual Pump, 7.5 HP, High Head
B – Dual Pump, 10 HP
C – Dual Pump, 15 HP
F – Single Pump, 3 HP with VFD
G – Single Pump, 5 HP with VFD
H – Single Pump, 7.5 HP with VFD
J – Single Pump, 10 HP with VFD
K – Single Pump, 15 HP with VFD
M – Dual Pump, 3 HP with VFD
N – Dual Pump, 5 HP with VFD
P – Dual Pump, 7.5 HP, Low Head with VFD
T – Dual Pump, 7.5 HP, High Head with VFD
Q – Dual Pump, 10 HP with VFD
R – Dual Pump, 15 HP with VFD
Z – Special order designation

SEE NEXT PAGE FOR REMAINDER OF MODEL NUMBER NOMENCLATURE

Cooler Options

- – Integral Cooler, CRN (Canada)
0 – Integral Cooler, Cooler Heater, CRN (Canada)
4 – Integral Cooler, Microchannel (MCHX), CRN (Canada)
5 – Integral Cooler, Cooler Heater, Microchannel (MCHX), CRN (Canada)
G – Integral Cooler, no CRN
H – Integral Cooler, Cooler Heater, no CRN
K – Integral Cooler, Microchannel (MCHX), no CRN
L – Integral Cooler, Cooler Heater, Microchannel (MCHX), no CRN
R – Integral Cooler, Microchannel (MCHX), Heat Recovery, no CRN
S – Integral Cooler, Cooler Heater, Microchannel (MCHX), Heat Recovery, no CRN
T – Integral Cooler, Microchannel (MCHX), Heat Recovery, CRN (Canada)
V – Integral Cooler, Cooler Heater, Microchannel (MCHX), Heat Recovery, CRN (Canada)

LEGEND

CRN — Canadian Registration Number
EMM — Energy Management Module
GFI-CO — Ground Fault Interrupting Convenience Outlet
LON — Local Operating Network
SCCR — Short Circuit Current Rating
VFD — Variable Frequency Device
XL — Across-the-Line Start

*Refer to Table 1 on page 2 for modular unit combinations.
†Sponsored by ASHRAE (American Society of Heating, Refrigerating and Air-Conditioning Engineers).

NOTE: A "Z" in position 11 indicates a special order machine. Digits following do not correspond to tables.

Fig. 1 — AquaSnap® Chiller Model Number Designation

30RB F 190 6 - 8 0 - - - L

SEE PREVIOUS PAGE FOR REMAINDER OF MODEL NUMBER NOMENCLATURE

Refrigeration Circuit Options
- **-** – No Suction Line Insulation
- **0** – Suction Insulation
- **1** – Suction Service Valves
- **2** – Low Ambient Head Pressure Control Operation
- **3** – Suction Insulation, Suction Service Valves
- **4** – Suction Insulation, Low Ambient Head Pressure Control Operation
- **5** – Suction Service Valves, Low Ambient Head Pressure Control Operation
- **6** – Suction Insulation, Service Valves, Low Ambient Head Pressure Control Operation
- **7** – Minimum Load Control
- **8** – Suction Insulation, Minimum Load Control Operation
- **9** – Suction Service Valves, Minimum Load Control Operation
- **B** – Low Ambient Operation, Minimum Load Control Operation
- **C** – Suction Insulation, Suction Service Valves, Minimum Load Control Operation
- **D** – Suction Insulation, Low Ambient Head Pressure Control Operation, Minimum Load Control Operation
- **F** – Suction Service Valves, Low Ambient Head Pressure Control Operation, Minimum Load Control Operation
- **G** – Suction Insulation, Suction Service Valves, Low Ambient Head Pressure Control, Operation, Minimum Load Control Operation
- **H** – Suction Service Valves, High-Efficiency Variable Condenser Fans
- **J** – Suction Insulation, Suction Service Valve, High-Efficiency Variable Condenser Fans
- **K** – High-Efficiency Variable Condenser Fans
- **L** – Suction Insulation, High-Efficiency Variable Condenser Fans
- **M** – Suction Service Valves, High-Efficiency Variable Condenser Fans, Minimum Load Control Operation
- **N** – Suction Insulation, Suction Service Valve, High-Efficiency Variable Condenser Fans, Minimum Load Control Operation
- **P** – High-Efficiency Variable Condenser Fans, Minimum Load Control Operation
- **Q** – Suction Insulation, High-Efficiency Variable Condenser Fans, Minimum Load Control Operation

LEGEND

CRN	—	Canadian Registration Number
EMM	—	Energy Management Module
GFI-CO	—	Ground Fault Interrupting Convenience Outlet
LON	—	Local Operating Network
SCCR	—	Short Circuit Current Rating
VFD	—	Variable Frequency Device
XL	—	Across-the-Line Start

*Refer to Table 1 on page 2 for modular unit combinations.
†Sponsored by ASHRAE (American Society of Heating, Refrigerating and Air-Conditioning Engineers).

NOTE: A "Z" in position 11 indicates a special order machine. Digits following do not correspond to tables.

Packaging/Security Options
- **L** – No Packaging
- **0** – Skid
- **1** – Skid, Top Crate, Bag
- **3** – Coil Trim Panels
- **4** – Skid, Coil Trim Panels
- **5** – Skid, Top Crate, Bag, Coil Trim Panels
- **7** – Coil Trim Panels, Upper and Lower Grilles
- **8** – Skid, Coil Trim Panels, Upper and Lower Grilles
- **9** – Skid, Top Crate, Bag, Coil Trim Panels, Upper and Lower Grilles
- **C** – Trim Panels, Upper and Lower Grilles, Upper Hail Guards
- **D** – Skid, Trim Panels, Upper and Lower Grilles, Upper Hail Guards
- **F** – Skid, Top Crate, Bag, Trim Panels, Upper and Lower Grilles, Upper Hail Guards
- **H** – Skid, Full End Covers
- **J** – Skid, Top Crate, Bag, Full End Covers
- **K** – Full End Covers

Controls/Communication Options
- **-** – None
- **0** – EMM
- **1** – Remote Service Port, GFI-CO
- **2** – EMM, Remote Service Port, GFI-CO
- **3** – BACnet† Communication
- **4** – BACnet Communication, EMM
- **5** – BACnet Communication, Remote Service Port, GFI-CO
- **6** – BACnet Communication, EMM, Remote Service Port, GFI-CO
- **7** – BACnet Translator
- **8** – BACnet Translator, EMM
- **9** – BACnet Translator, Remote Service Port, GFI-CO
- **B** – BACnet Translator, EMM, Remote Service Port, GFI-CO
- **H** – LON Translator
- **J** – LON Translator, EMM
- **K** – LON Translator, Remote Service Port, GFI-CO
- **L** – LON Translator, EMM, Remote Service Port, GFI-CO

Electrical/Low Sound Options
- **-** – Single Point Power Connections, XL, Terminal Block
- **0** – Single Point Power Connections, XL, Terminal Block, High SCCR
- **3** – Dual Point Power Connections, XL, Terminal Block
- **4** – Dual Point Power Connections, XL, Terminal Block, High SCCR
- **7** – Single Point Power Connections, XL, Non-Fused Disconnect
- **8** – Single Point Power Connections, XL, Non-Fused Disconnect, High SCCR
- **C** – Dual Point Power Connections, XL, Non-Fused Disconnect
- **D** – Dual Point Power Connections, XL, Non-Fused Disconnect, High SCCR
- **G** – Single Point Power Connections, XL, Terminal Block, Cmpr Blankets
- **H** – Single Point Power Connections, XL, Terminal Block, Cmpr Blankets, High SCCR
- **J** – Dual Point Power Connections, XL, Terminal Block, Cmpr Blankets
- **K** – Dual Point Power Connections, XL, Terminal Block, Cmpr Blankets, High SCCR
- **L** – Single Point Power Connections, XL, Non-Fused Disconnect, Cmpr Blankets
- **M** – Single Point Power Connections, XL, Non-Fused Disconnect, Cmpr Blankets, High SCCR
- **N** – Dual Point Power Connections, XL, Non-Fused Disconnect, Cmpr Blankets
- **P** – Dual Point Power Connections, XL, Non-Fused Disconnect, Cmpr Blankets, High SCCR
- **Q** – Single Point Power Connections, XL, Terminal Block, Cmpr Blankets, Cmpr Enclosures
- **R** – Single Point Power Connections, XL, Terminal Block, Cmpr Blankets, Cmpr Enclosures, High SCCR
- **S** – Dual Point Power Connections, XL, Terminal Block, Cmpr Blankets, Cmpr Enclosures
- **T** – Dual Point Power Connections, XL, Terminal Block, Cmpr Blankets, Cmpr Enclosures, High SCCR
- **V** – Single Point Power Connections, XL, Non-Fused Disconnect, Cmpr Blankets, Cmpr Enclosures
- **W** – Single Point Power Connections, XL, Non-Fused Disconnect, Cmpr Blankets, Cmpr Enclosures, High SCCR
- **X** – Dual Point Power Connections, XL, Non-Fused Disconnect, Cmpr Blankets, Cmpr Enclosures
- **W** – Dual Point Power Connections, XL, Non-Fused Disconnect, Cmpr Blankets, Cmpr Enclosures, High SCCR

Fig. 1 — AquaSnap® Chiller Model Number Designation (cont)

NOTES:

1. Unit must have clearances as follows:
   Top — Do not restrict.
   Sides and End — 6′ (1.8 m) from solid surface.
2. All pumps have drains located at the bottom of volute for draining.
3. Temperature relief devices located on suction line, liquid line and filter drier of each circuit and have 1/4″ flare connection.
4. Units without a pump package have the same leaving water connection, Y and Z dimensions (entering water), and Pump Discharge X dimensions as units with a pump package.
5. Dimensions are in mm [inches].
6. Allow 8 ft (2.4 m) of service access on either side of unit for condenser coil removal.

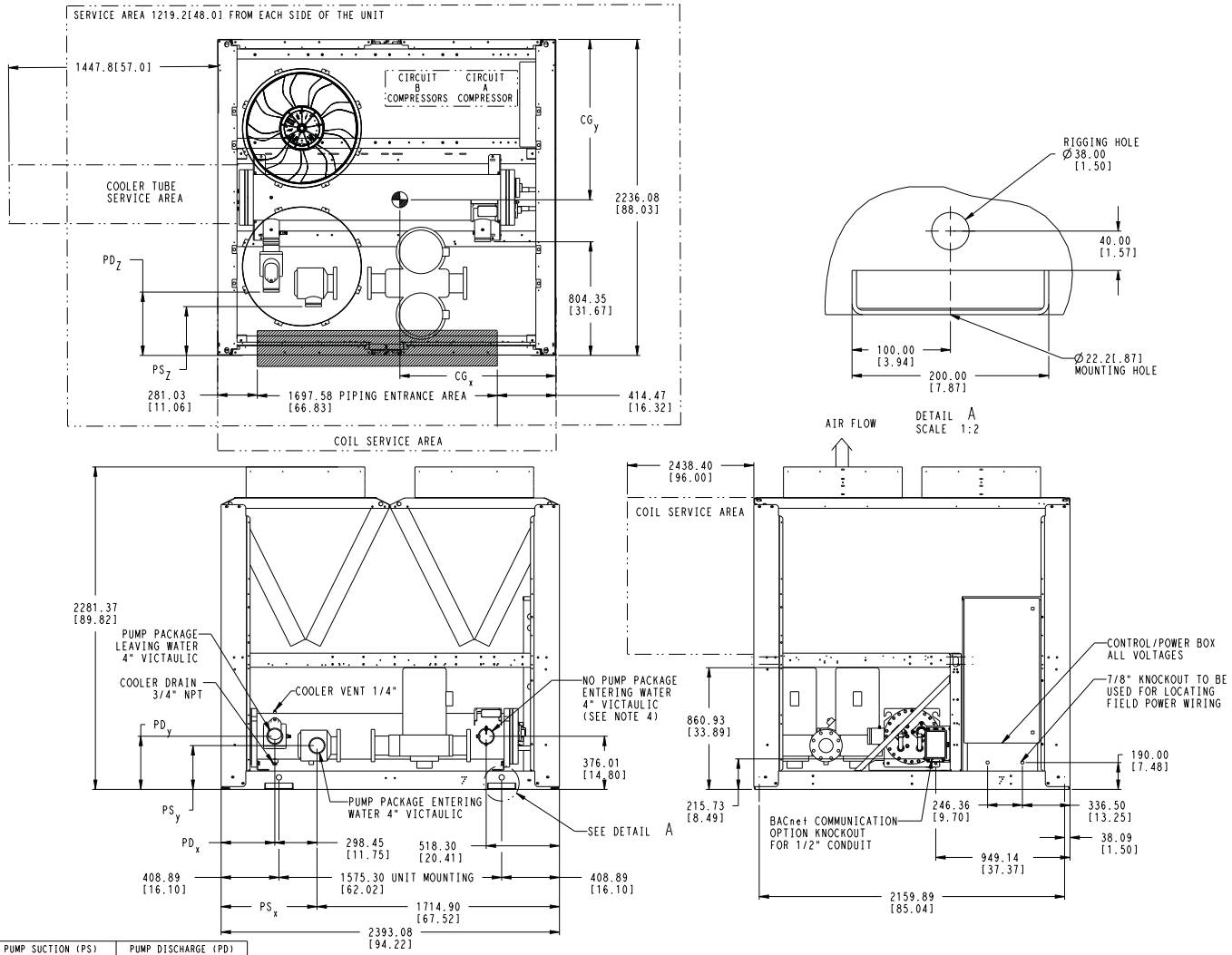

	WEIGHT CU/AL lb/kg	MAX WEIGHT CU/AL PUMP lb/kg	WEIGHT CU/CU lb/kg	MAX WEIGHT CU/CU PUMP lb/kg	WEIGHT MCHX lb/kg	MAX WEIGHT MCHX PUMP lb/kg	CENTER OF GRAVITY		PUMP SUCTION (PS)			PUMP DISCHARGE (PD)		
							CGx MM [INCH]	CGy MM [INCH]	X ±.25	Y ±.25	Z ±.25	X ±.25	Y ±.25	Z ±.25
30RB-060	4111 1869	4944 2247	4593 2088	5426 2466	3783 1716	4616 2094	1164 [45.82]	1038 [40.86]	675.6 [26.6]	309.9 [12.2]	353.1 [13.9]	381.0 [15.0]	482.6 [19.0]	188.0 [7.4]
30RB-070	4317 1932	5150 2641	4799 2181	5632 2560	3978 1804	4811 2182	1165 [45.86]	1013 [39.88]	675.6 [26.6]	309.9 [12.2]	353.1 [13.9]	381.0 [15.0]	482.6 [19.0]	188.0 [7.4]

MCHX — Microchannel Condenser Coil

Fig. 2 — 30RB060, 070 Air-Cooled Chiller Dimensions

NOTES:
1. Unit must have clearances as follows:
   Top — Do not restrict.
   Sides and End — 6′ (1.8 m) from solid surface.
2. All pumps have drains located at the bottom of volute for draining.
3. Temperature relief devices located on suction line, liquid line and filter drier of each circuit and have 1/4″ flare connection.
4. Units without a pump package have the same leaving water connection, Y and Z dimensions (entering water), and Pump Discharge X dimensions as units with a pump package.
5. Dimensions are in mm [inches].
6. Allow 8 ft (2.4 m) of service access on either side of unit for condenser coil removal.

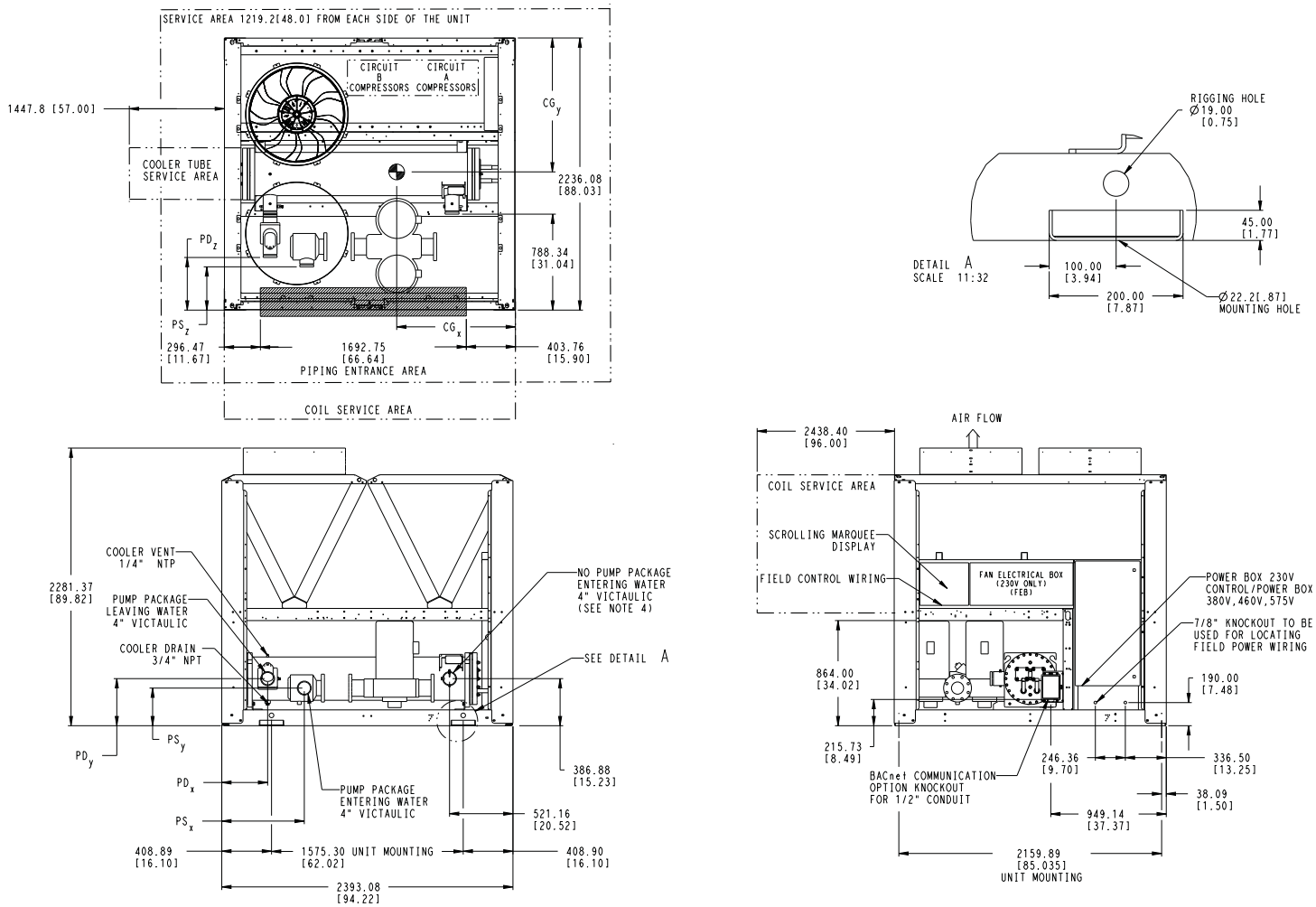

	WEIGHT CU/AL lb/kg	MAX WEIGHT CU/AL PUMP lb/kg	WEIGHT CU/CU lb/kg	MAX WEIGHT CU/CU PUMP lb/kg	WEIGHT MCHX lb/kg	MAX WEIGHT MCHX PUMP lb/kg	CENTER OF GRAVITY		PUMP SUCTION (PS)			PUMP DISCHARGE (PD)		
							CGx MM [INCH]	CGy MM [INCH]	X ±.25	Y ±.25	Z ±.25	X ±.25	Y ±.25	Z ±.25
30RB-080	4600 2091	5523 2511	5082 2310	6005 2730	4267 1934	5190 2355	1206 [47.48]	1012 [39.84]	675.6 [26.6]	309.9 [12.2]	353.1 [13.9]	381.0 [15.0]	497.8 [19.6]	170.2 [6.7]

MCHX — Microchannel Condenser Coil

Fig. 3 — 30RB080 Air-Cooled Chiller Dimensions

NOTES:
1. Unit must have clearances as follows:
   Top — Do not restrict.
   Sides and End — 6′ (1.8 m) from solid surface.
2. Temperature relief devices located on suction line, liquid line and filter drier of each circuit and have 1/4″ flare connection.
3. Dimensions are in mm [inches].
4. Allow 8 ft (2.4 m) of service access on either side of unit for condenser coil removal.

LEGEND

HR — Heat Reclaim
MCHX — Microchannel Condenser Coil
PRV — Pressure Relief Valve

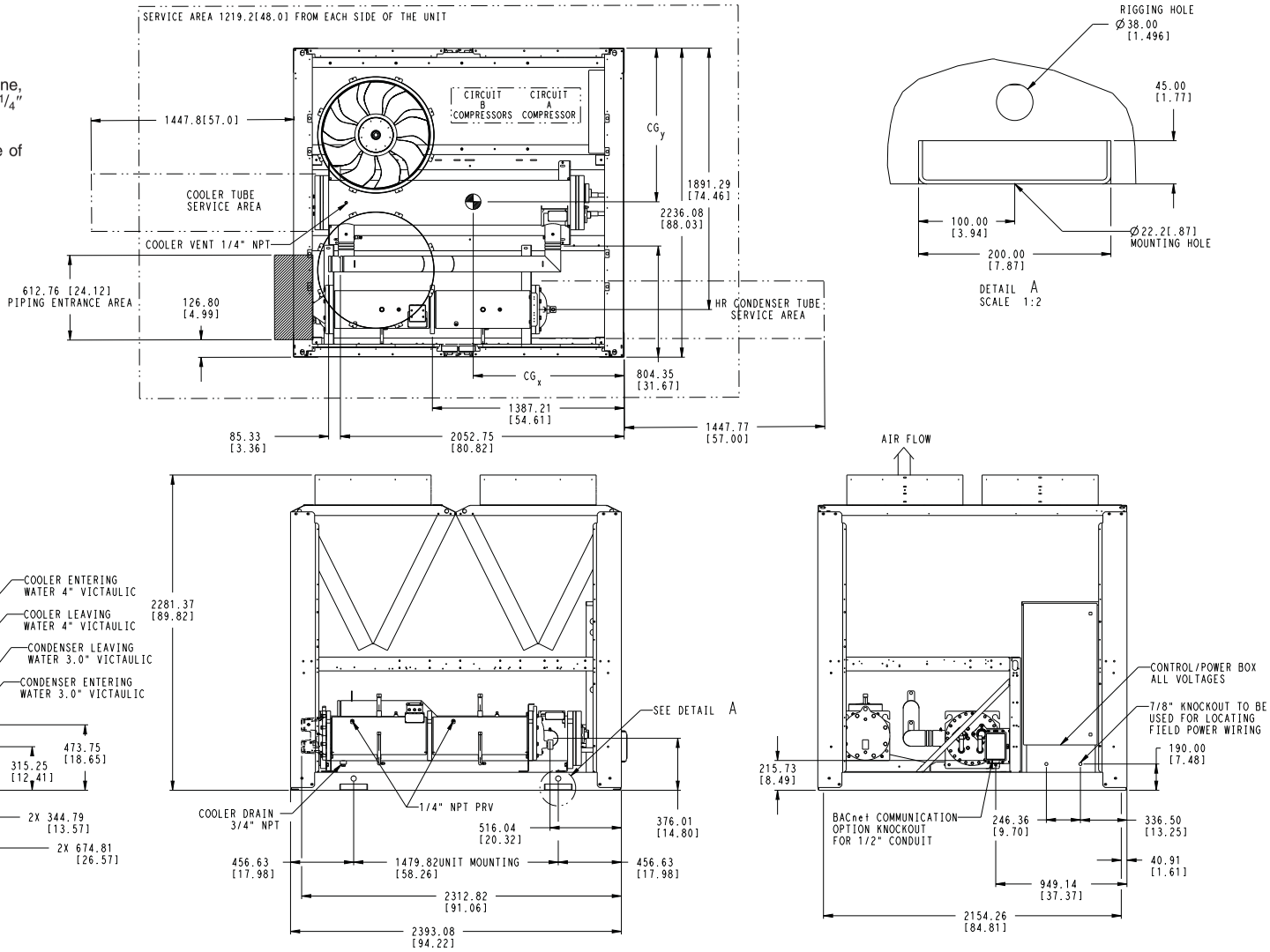

	WEIGHT MCHX lb/kg	CENTER OF GRAVITY	
		CGx MM [INCH]	CGy MM [INCH]
30RB-060	4703 2133	1235 [48.62]	1082 [42.60]
30RB-070	4898 2222	1198 [47.17]	1093 [43.03]
30RB-080	5187 2353	1199 [47.20]	1120 [44.10]

Fig. 4 — 30RB060-080 Air-Cooled Chiller with Heat Reclaim Option Dimensions

NOTES:
1. Unit must have clearances as follows:
   Top — Do not restrict.
   Sides and End — 6′ (1.8 m) from solid surface.
2. All pumps have drains located at the bottom of volute for draining.
3. Temperature relief devices located on suction line, liquid line and filter drier of each circuit and have 1/4″ flare connection.
4. Units without a pump package have the same leaving water connection, Y and Z dimensions (entering water), and Pump Discharge X dimensions as units with a pump package.
5. Dimensions are in mm [inches].
6. Allow 8 ft (2.4 m) of service access on either side of unit for condenser coil removal.

MCHX — Microchannel Condenser Coil

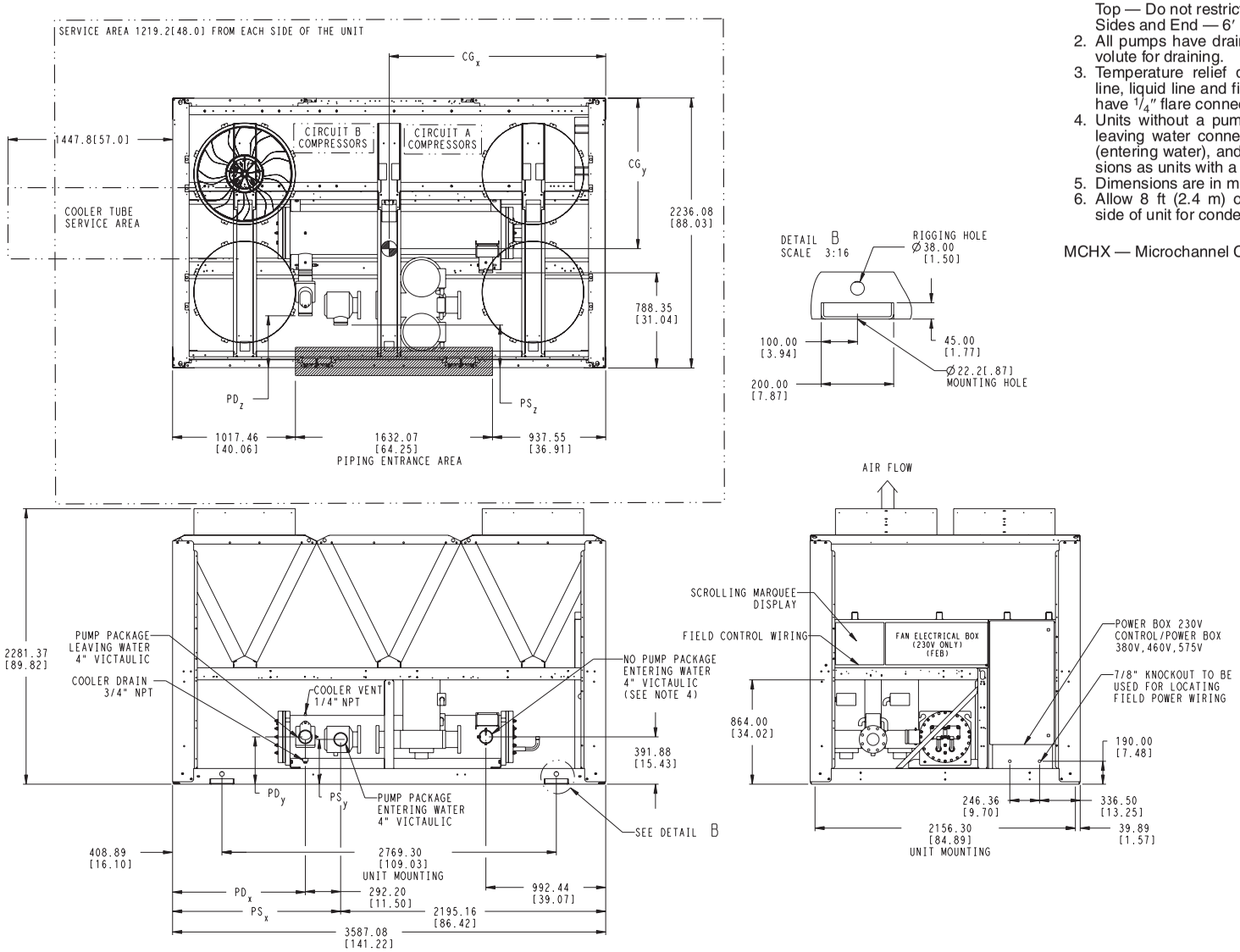

	WEIGHT CU/AL lb/kg	MAX WEIGHT CU/AL PUMP lb/kg	WEIGHT CU/CU lb/kg	MAX WEIGHT CU/CU PUMP lb/kg	WEIGHT MCHX lb/kg	MAX WEIGHT MCHX PUMP lb/kg	CENTER OF GRAVITY		PUMP SUCTION (PS)			PUMP DISCHARGE (PD)		
							CGx MM [INCH]	CGy MM [INCH]	X ±.25	Y ±.25	Z ±.25	X ±.25	Y ±.25	Z ±.25
30RB-090	5932 2697	6855 3116	6656 3026	7579 3445	5779 2472	6372 2890	1625 [64.0]	1017 [40.0]	1389.4 [54.7]	309.9 [12.2]	353.1 [13.9]	1097.3 [43.2]	497.8 [19.6]	170.2 [6.7]
30RB-100	6155 2798	7078 3217	6879 3127	7802 3547	5663 2569	6586 2987	1614 [63.5]	999 [39.3]	1389.4 [54.7]	309.9 [12.2]	353.1 [13.9]	1097.3 [43.2]	497.8 [19.6]	170.2 [6.7]

Fig. 5 — 30RB090, 100 Air-Cooled Chiller Dimensions

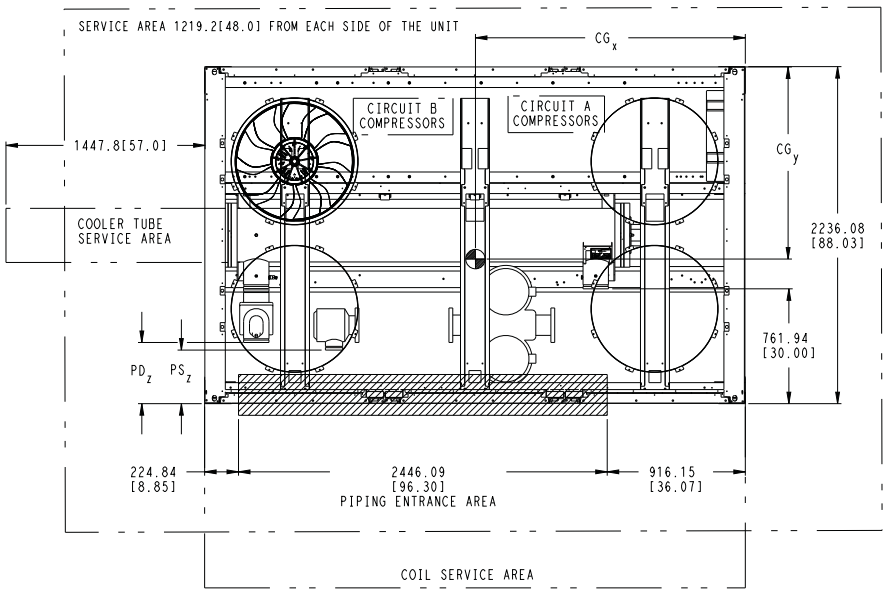

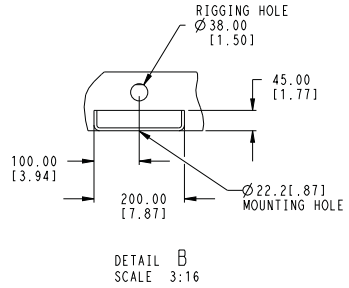

NOTES:

1. Unit must have clearances as follows:
   Top — Do not restrict.
   Sides and End — 6′ (1.8 m) from solid surface.
   Airflow Side — 8′ (2.4 m) required for coil service area.
2. All pumps have drains located at the bottom of volute for draining.
3. Temperature relief devices ocated on suction line, liquid line and filter drier of each circuit and have 1/4″ flare connection.
4. No pump package leaving water connection is same size and has same Y and Z dimensions as entering water. Also has same PDx dimension as pump package.
5. Dimensions are in mm [inches].

MCHX — Microchannel Condenser Coil

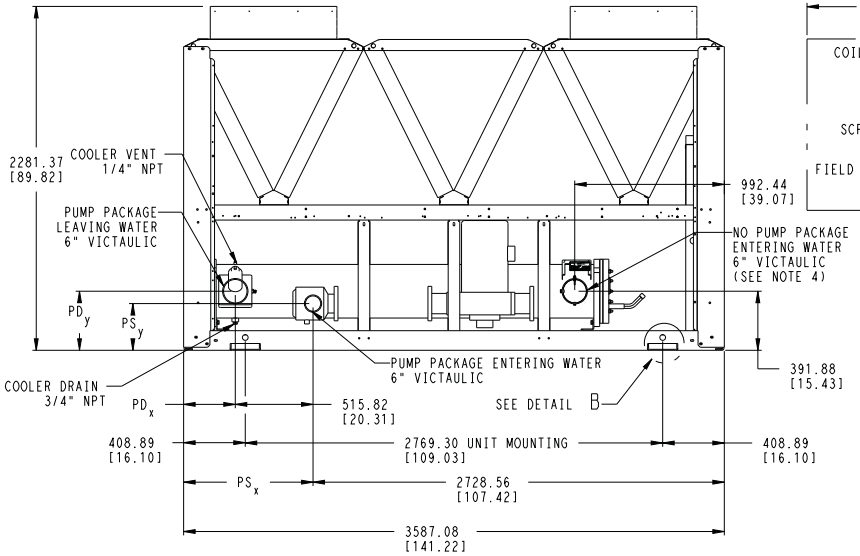

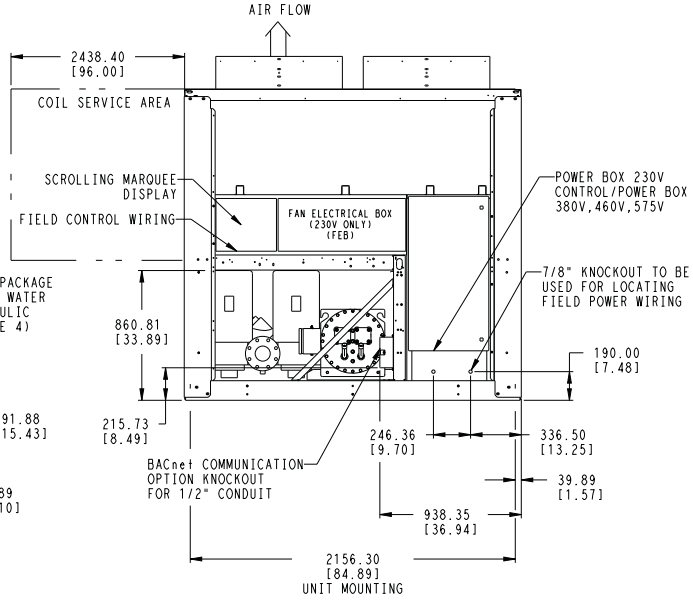

	WEIGHT CU/AL lb/kg	MAX WEIGHT CU/AL PUMP lb/kg	WEIGHT CU/CU lb/kg	MAX WEIGHT CU/CU PUMP lb/kg	WEIGHT MCHX lb/kg	MAX WEIGHT MCHX PUMP lb/kg	CENTER OF GRAVITY		PUMP SUCTION (PS)			PUMP DISCHARGE (PD)		
							CGx MM [INCH]	CGy MM [INCH]	X ±.25	Y ±.25	Z ±.25	X ±.25	Y ±.25	Z ±.25
30RB-110	6519 2963	7442 3383	7243 3292	8166 3712	6027 2734	6950 3152	1713 [67.44]	997 [39.25]	856.0 [33.7]	281.9 [11.1]	60.9 [2.4]	340.4 [13.4]	391.2 [15.4]	233.7 [9.2]

Fig. 6 — 30RB110 Air-Cooled Chiller Dimensions

NOTES:
1. Unit must have clearances as follows:
   Top — Do not restrict.
   Sides and End — 6′ (1.8 m) from solid surface.
2. Temperature relief devices located on suction line, liquid line and filter drier of each circuit and have 1/4″ flare connection.
3. Dimensions are in mm [inches].
4. Allow 8 ft (2.4 m) of service access on either side of unit for condenser coil removal.

LEGEND

HR — Heat Reclaim
MCHX — Microchannel Condenser Coil

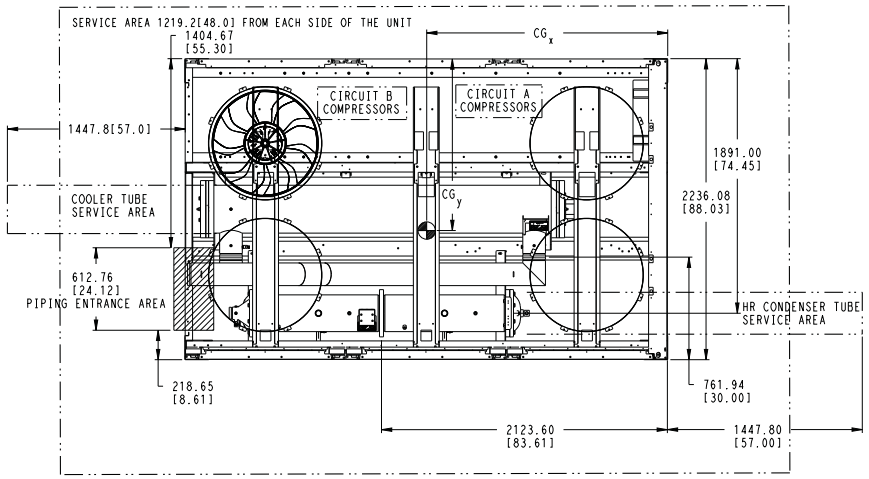

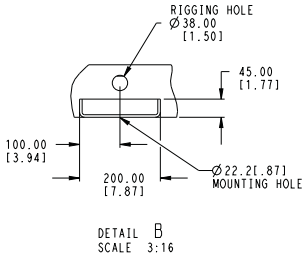

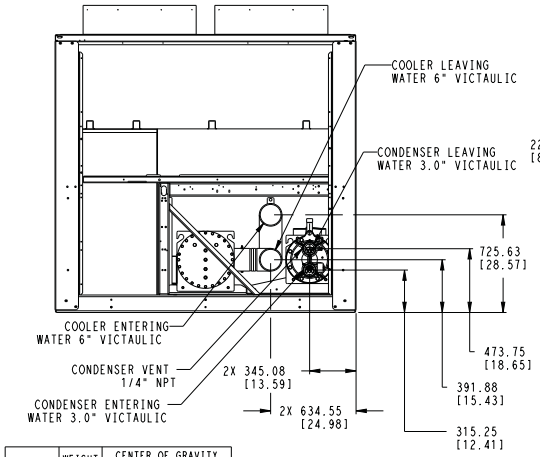

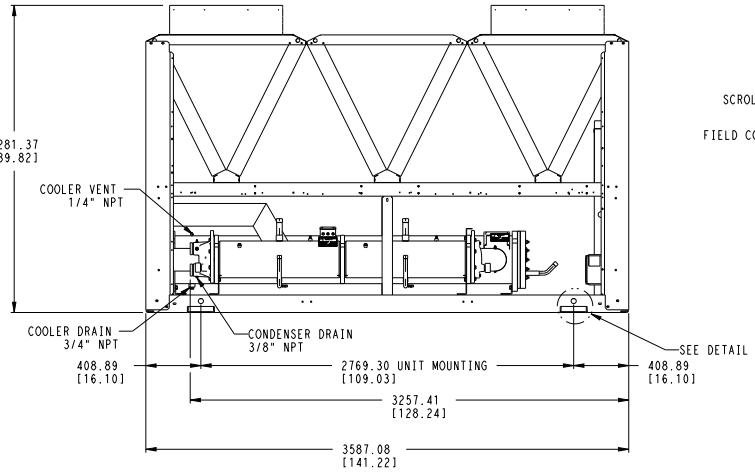

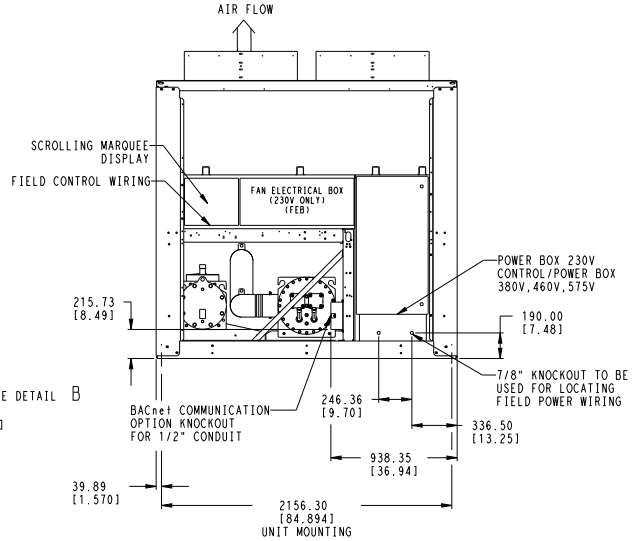

	WEIGHT MCHX lb/kg	CENTER OF GRAVITY	
		CGx MM [INCH]	CGy MM [INCH]
30RB-110	7133 3236	1759 [69.25]	1064 [41.89]
30RB-100	6769 3071	1676 [65.98]	1067 [42.00]
30RB-090	6555 2974	1689 [66.50]	1088 [42.84]

Fig. 7 — 30RB090-110 Air-Cooled Chiller with Heat Reclaim Option Dimensions

NOTES:
1. Unit must have clearances as follows:
   Top — Do not restrict.
   Sides and End — 6′ (1.8 m) from solid surface.
   Airflow side — 8′ (2.4 m) required for coil service area.
2. All pumps have drains located at the bottom of volute for draining.
3. Temperature relief devices located on suction line, liquid line and filter drier of each circuit and have 1/4″ flare connection.
4. No pump package leaving water connection is same size and has same Y and Z dimensions as entering water. Also has same PDx dimension as pump package.
5. Dimensions are in mm [inches].

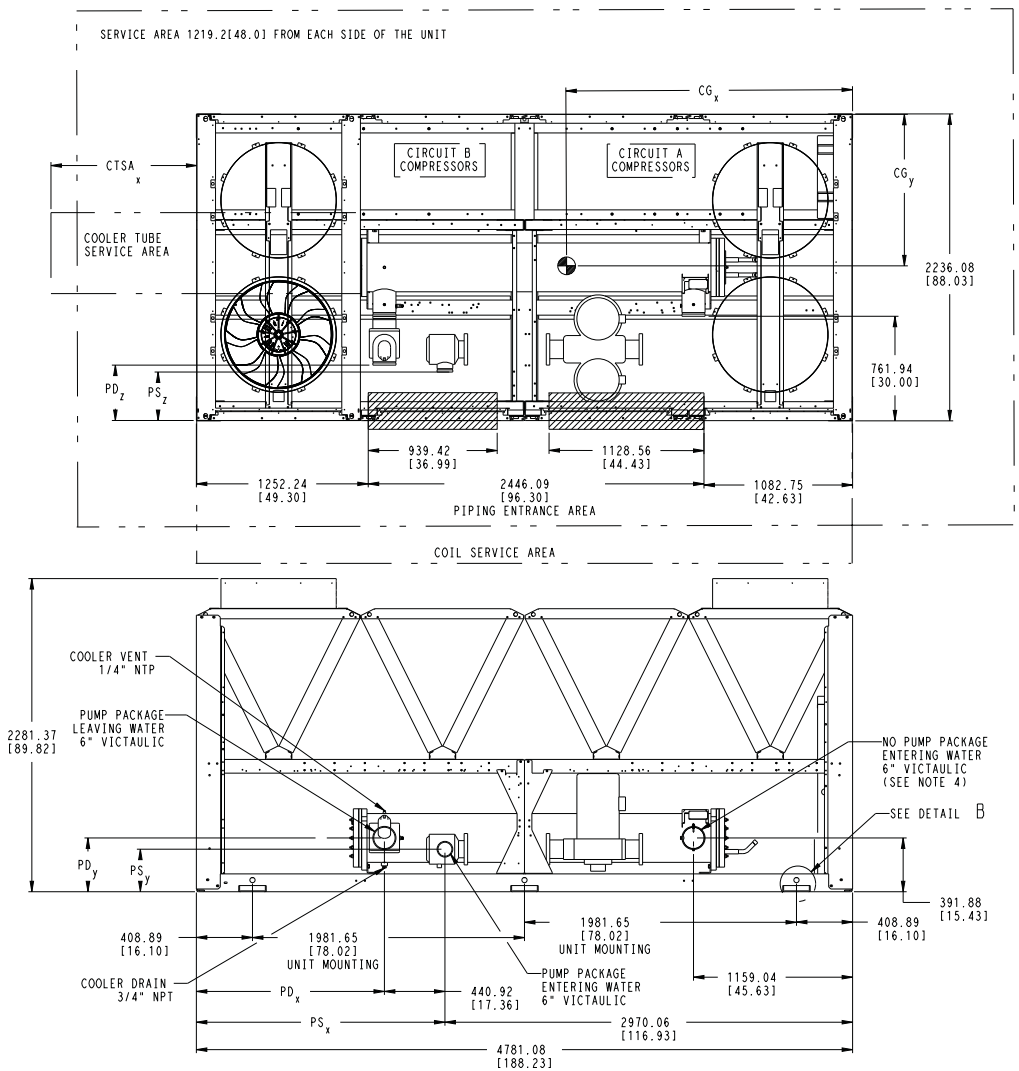

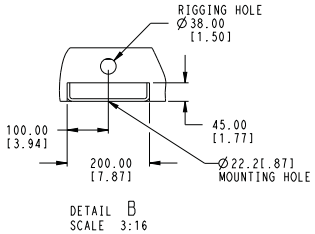

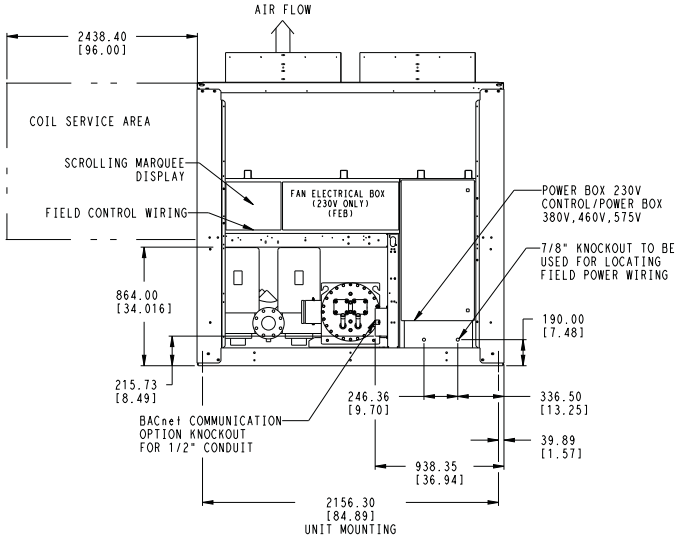

MCHX — Microchannel Condenser Coil

	WEIGHT CU/AL lb/kg	MAX WEIGHT CU/AL PUMP lb/kg	WEIGHT CU/CU lb/kg	MAX WEIGHT CU/CU PUMP lb/kg	WEIGHT MCHX lb/kg	MAX WEIGHT MCHX PUMP lb/kg	CENTER OF GRAVITY		PUMP SUCTION (PS)			PUMP DISCHARGE (PD)			COOLER TUBE SERVICE AREA CTSA x MM [INCH]
							CGx MM [INCH]	CGy MM [INCH]	X ±.25	Y ±.25	Z ±.25	X ±.25	Y ±.25	Z ±.25	
30RB-120	7690 3488	8613 3907	8534 3871	9457 4290	7119 3229	8042 3648	2346 [92.36]	993 [39.09]	1808.5 [71.2]	281.9 [11.1]	60.9 [2.4]	1366.5 [53.8]	391.2 [15.4]	233.7 [9.2]	1447.8 [57.0]
30RB-130	8045 3649	8968 4068	9010 4087	9933 4506	7402 3358	8325 3776	2272 [89.45]	983 [38.70]	1808.5 [71.2]	281.9 [11.1]	60.9 [2.4]	1366.5 [53.8]	391.2 [15.4]	233.7 [9.2]	1447.8 [57.0]

Fig. 8 — 30RB120, 130 Air-Cooled Chiller Dimensions

NOTES:
1. Unit must have clearances as follows:
   Top — Do not restrict.
   Sides and End — 6′ (1.8 m) from solid surface.
2. Temperature relief devices located on suction line, liquid line and filter drier of each circuit and have 1/4″ flare connection.
3. Dimensions are in mm [inches].
4. Allow 8 ft (2.4 m) of service access on either side of unit for condenser coil removal.

LEGEND

HR — Heat Reclaim
MCHX — Microchannel Condenser Coil

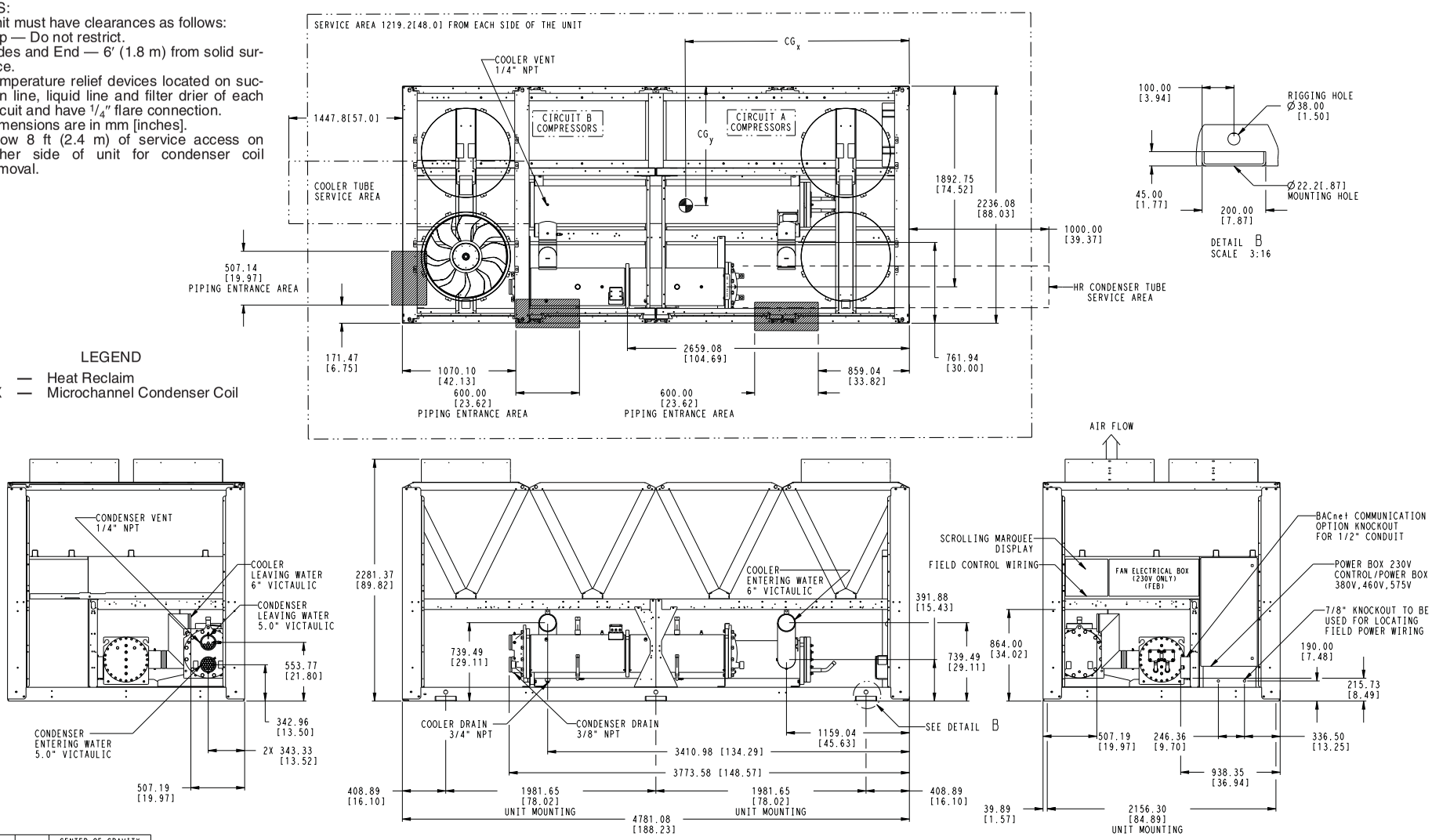

	WEIGHT MCHX lb/kg	CENTER OF GRAVITY	
		CGx MM [INCH]	CGy MM [INCH]
30RB-120	8405 3813	2413 [95.00]	1089 [42.87]

Fig. 9 — 30RB120 Air-Cooled Chiller with Heat Reclaim Option Dimensions

LEGEND

HR — Heat Reclaim
MCHX — Microchannel Condenser Coil

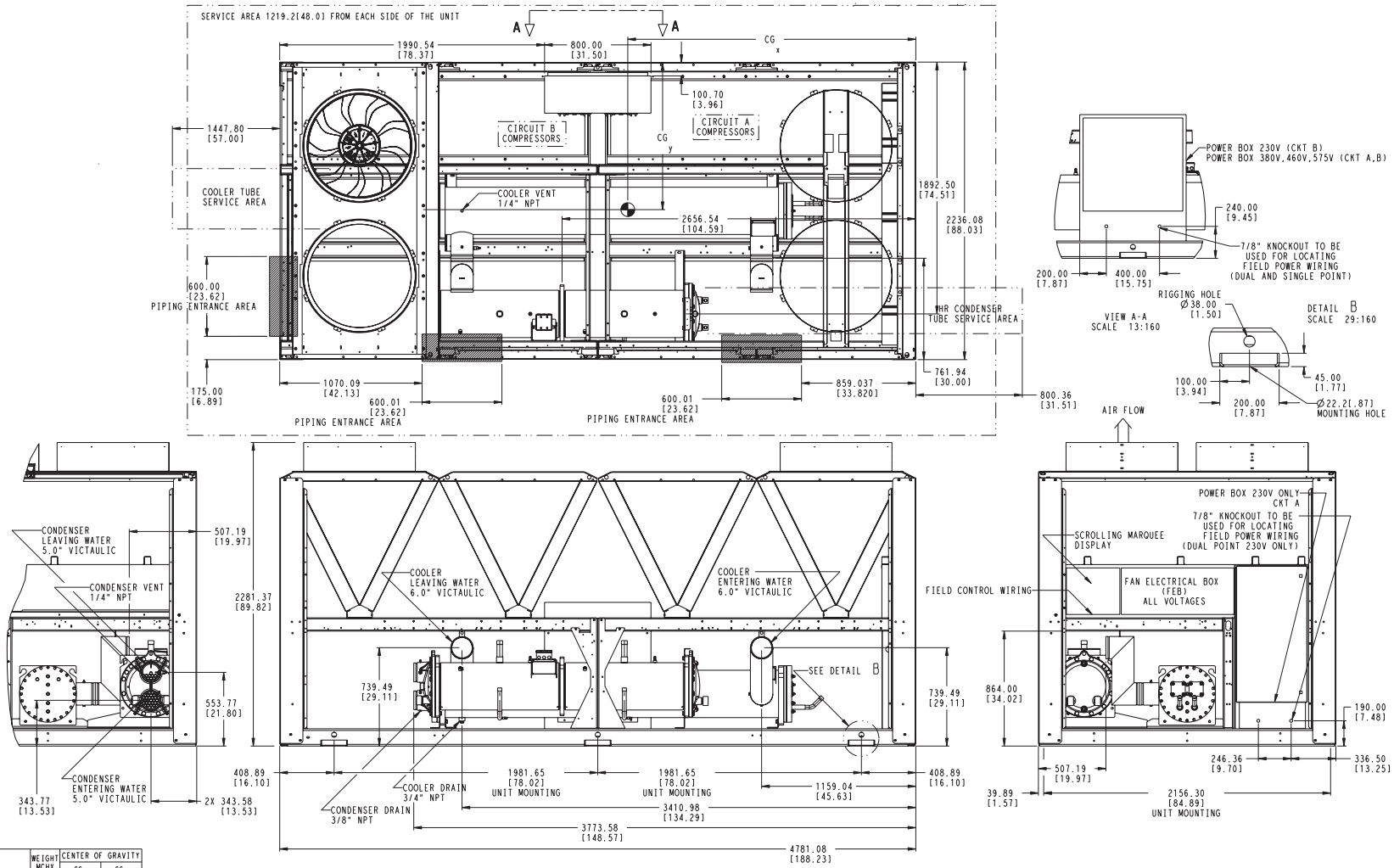

	WEIGHT MCHX lb/kg	CENTER OF GRAVITY	
		CGx MM [INCH]	CGy MM [INCH]
30RB-130	8814 3998	2346 [92.36]	1075 [42.32]

NOTES:
1. Unit must have clearances as follows:
   Top — Do not restrict.
   Sides and End — 6′ (1.8 m) from solid surface.
2. Temperature relief devices located on suction line, liquid line and filter drier of each circuit and have 1/4″ flare connection.
3. Dimensions are in mm [inches].
4. Allow 8 ft (2.4 m) of service access on either side of unit for condenser coil removal.

Fig. 10 — 30RB130 Air-Cooled Chiller with Heat Reclaim Option Dimensions

NOTES:
1. Unit must have clearances as follows:
   Top — Do not restrict.
   Sides and End — 6′ (1.8 m) from solid surface.
2. All pumps have drains located at the bottom of volute for draining.
3. Temperature relief devices located on suction line, liquid line and filter drier of each circuit and have 1/4″ flare connection.
4. Units without a pump package have the same leaving water connection, Y and Z dimensions (entering water), and Pump Discharge X dimensions as units with a pump package.
5. Dimensions are in mm [inches].
6. Allow 8 ft (2.4 m) of service access on either side of unit for condenser coil removal.

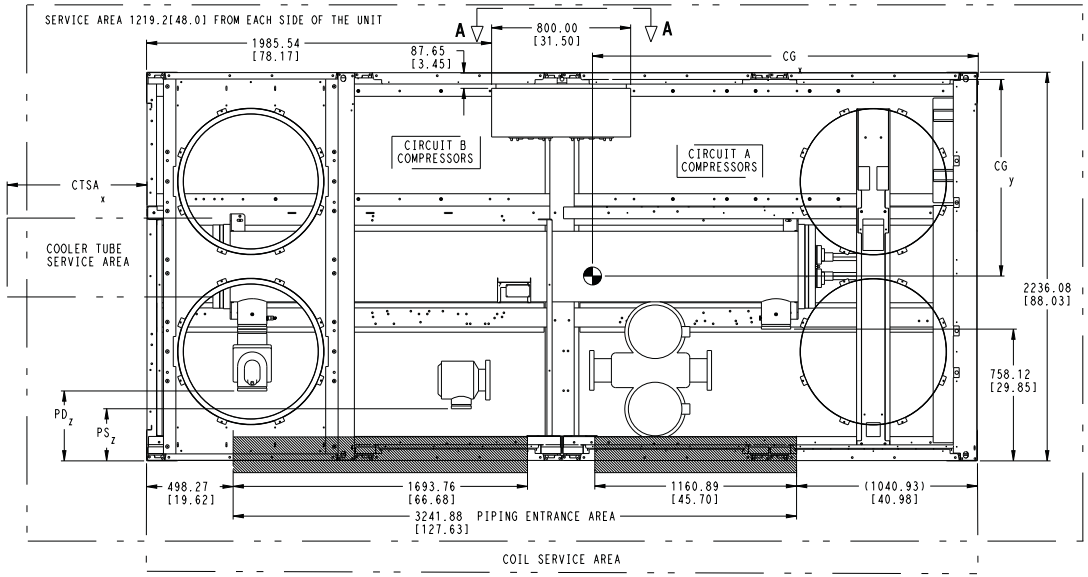

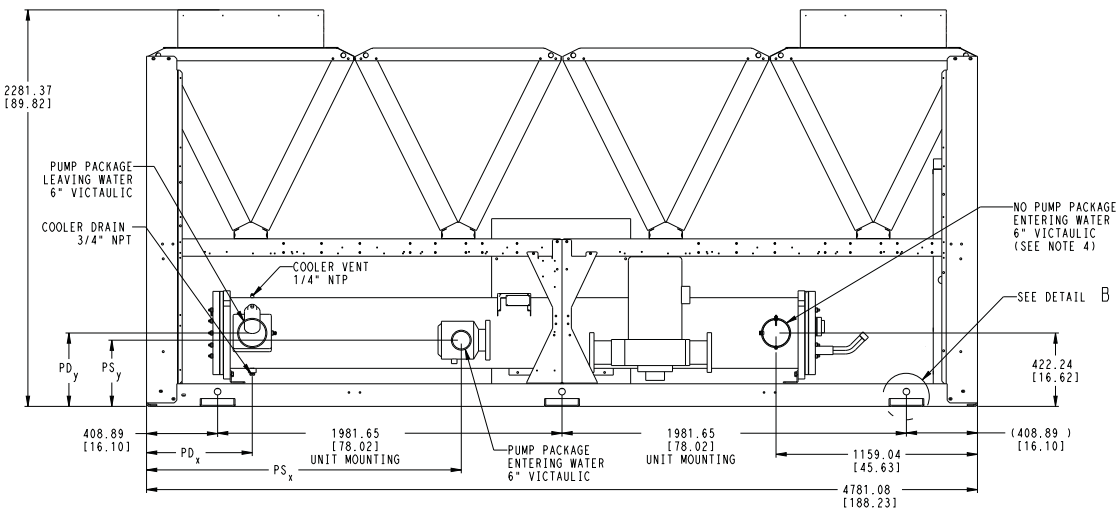

MCHX — Microchannel Condenser Coil

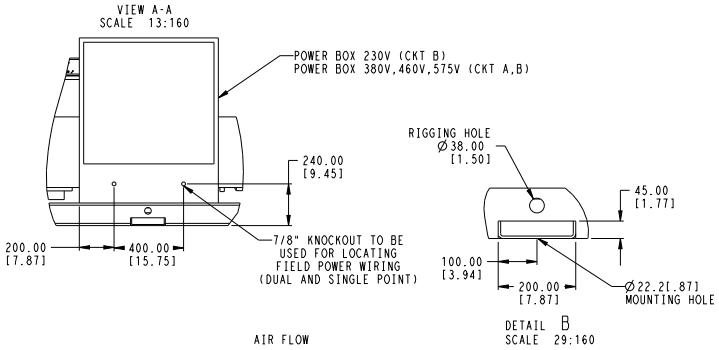

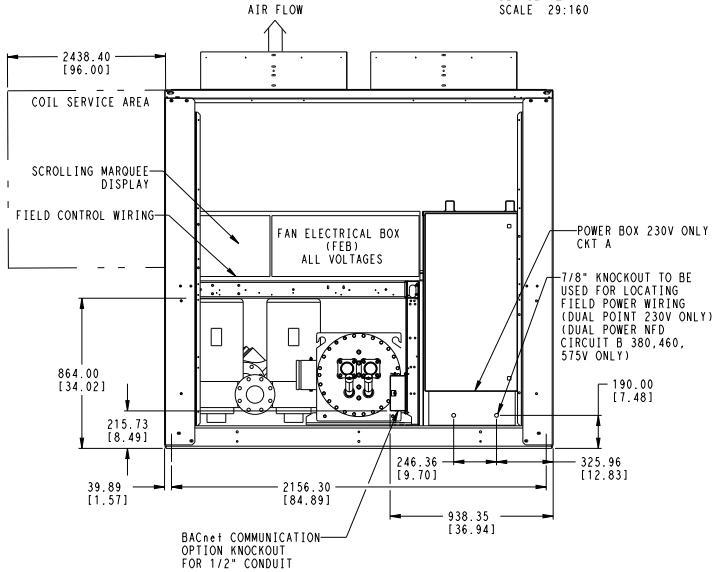

	WEIGHT CU/AL lb/kg	MAX WEIGHT CU/AL PUMP lb/kg	WEIGHT CU/CU lb/kg	MAX WEIGHT CU/CU PUMP lb/kg	WEIGHT MCHX lb/kg	MAX WEIGHT MCHX PUMP lb/kg	CENTER OF GRAVITY CGx MM [INCH]	CENTER OF GRAVITY CGy MM [INCH]	PUMP SUCTION (PS) X ±.25	PUMP SUCTION (PS) Y ±.25	PUMP SUCTION (PS) Z ±.25	PUMP DISCHARGE (PD) X ±.25	PUMP DISCHARGE (PD) Y ±.25	PUMP DISCHARGE (PD) Z ±.25	COOLER TUBE SERVICE AREA CTSA x MM [INCH]
30RB-150	9174 4161	10419 4726	10139 4599	11384 5164	8517 3863	9762 4428	2392 [94.17]	983 [38.70]	1808.5 [71.2]	381 [15.0]	297.2 [11.7]	604.5 [23.8]	421.6 [16.6]	231.1 [9.1]	2905.8 [114.4]

Fig. 11 — 30RB150 Air-Cooled Chiller Dimensions

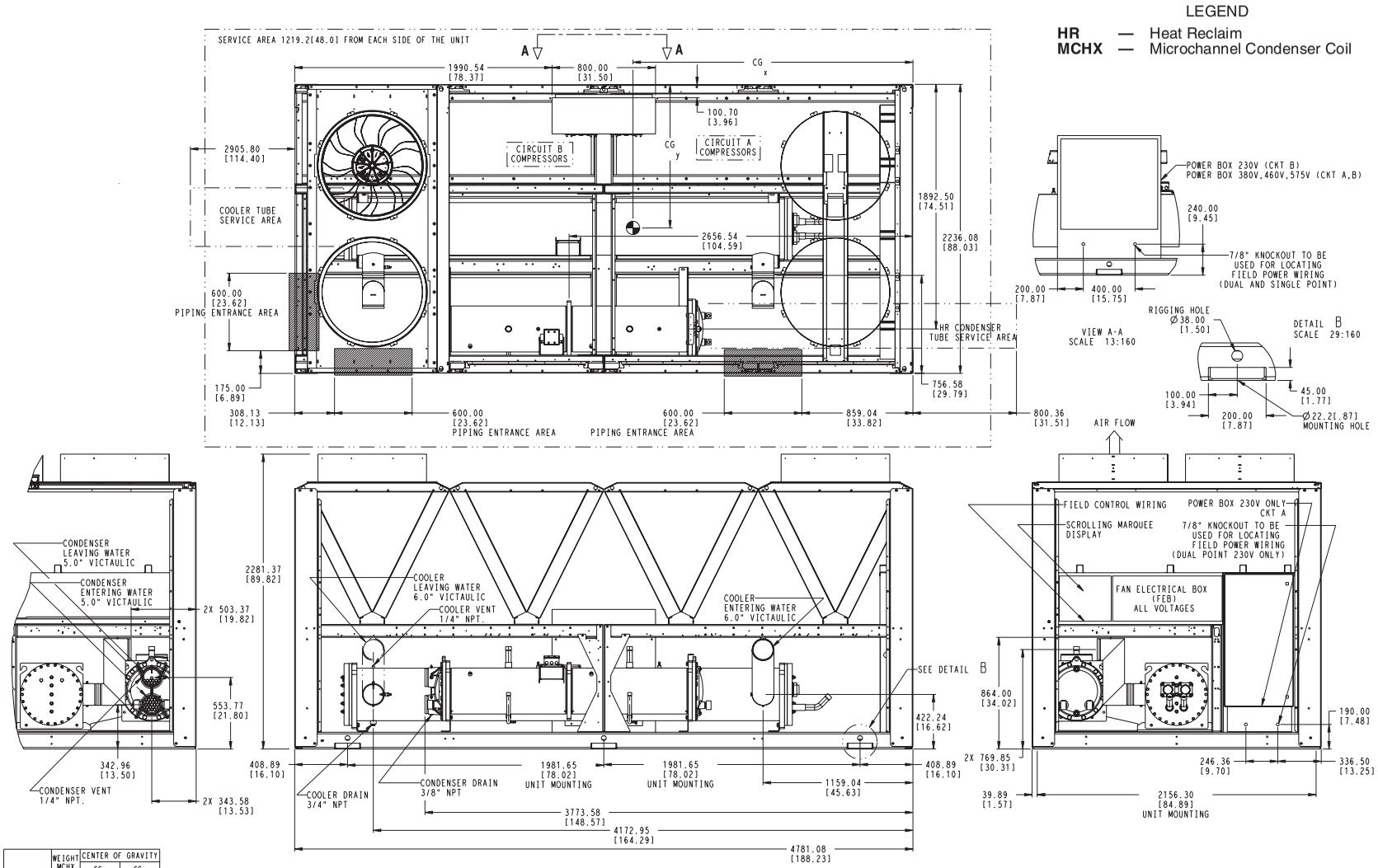

	WEIGHT MCHX lb/kg	CENTER OF GRAVITY CGx MM [INCH]	CGy MM [INCH]
30RB-150	9929 4504	2463 [96.97]	1058 [41.65]

NOTES:
1. Unit must have clearances as follows:
   Top — Do not restrict.
   Sides and End — 6′ (1.8 m) from solid surface.
2. Temperature relief devices located on suction line, liquid line and filter drier of each circuit and have 1/4″ flare connection.
3. Dimensions are in mm [inches].
4. Allow 8 ft (2.4 m) of service access on either side of unit for condenser coil removal.

Fig. 12 — 30RB150 Air-Cooled Chiller with Heat Reclaim Option Dimensions

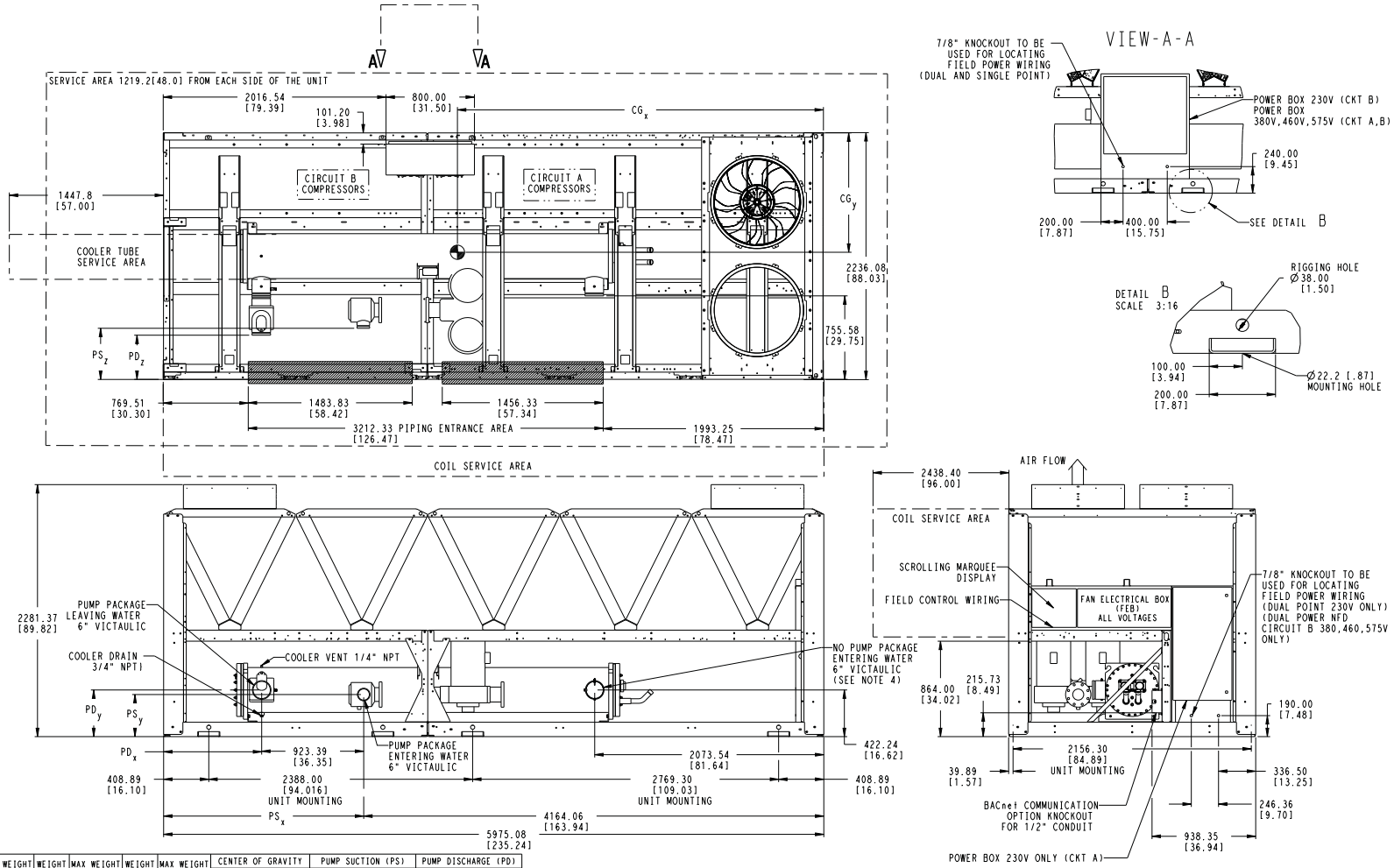

	WEIGHT CU/AL lb/kg	MAX WEIGHT CU/AL PUMP lb/kg	WEIGHT CU/CU lb/kg	MAX WEIGHT CU/CU PUMP lb/kg	WEIGHT MCHX lb/kg	MAX WEIGHT MCHX PUMP lb/kg	CENTER OF GRAVITY		PUMP SUCTION (PS)			PUMP DISCHARGE (PD)		
							CGx MM [INCH]	CGy MM [INCH]	X ±.25	Y ±.25	Z ±.25	X ±.25	Y ±.25	Z ±.25
30RB-160 315A/B,330B	10266 4666	11511 5232	11472 5215	12717 5781	9475 4297	10720 4860	3065 [120.66]	994 [39.13]	1808.48 [71.2]	381 [15.0]	297.2 [11.7]	883.92 [34.8]	421.64 [16.6]	231.14 [9.1]
30RB-170 330A,345A/B,360B	10601 4819	11846 5385	11807 5367	13052 5933	9799 4443	11044 5009	3114 [122.59]	978 [30.5]	1808.48 [71.2]	381 [15.0]	297.2 [11.7]	883.92 [34.8]	421.64 [16.6]	231.14 [9.1]

MCHX — Microchannel Condenser Coil

NOTES:
1. Unit must have clearances as follows:
   Top — Do not restrict.
   Sides and End — 6′ (1.8 m) from solid surface.
2. All pumps have drains located at the bottom of volute for draining.
3. Temperature relief devices located on suction line, liquid line and filter drier of each circuit and have $^1/_4$″ flare connection.
4. Units without a pump package have the same leaving water connection, Y and Z dimensions (entering water), and Pump Discharge X dimensions as units with a pump package.
5. Dimensions are in mm [inches].
6. Allow 8 ft (2.4 m) of service access on either side of unit for condenser coil removal.

Fig. 13 — 30RB160, 170, 315A/B, 330A/B, 345A/B, 360B Air-Cooled Chiller Dimensions

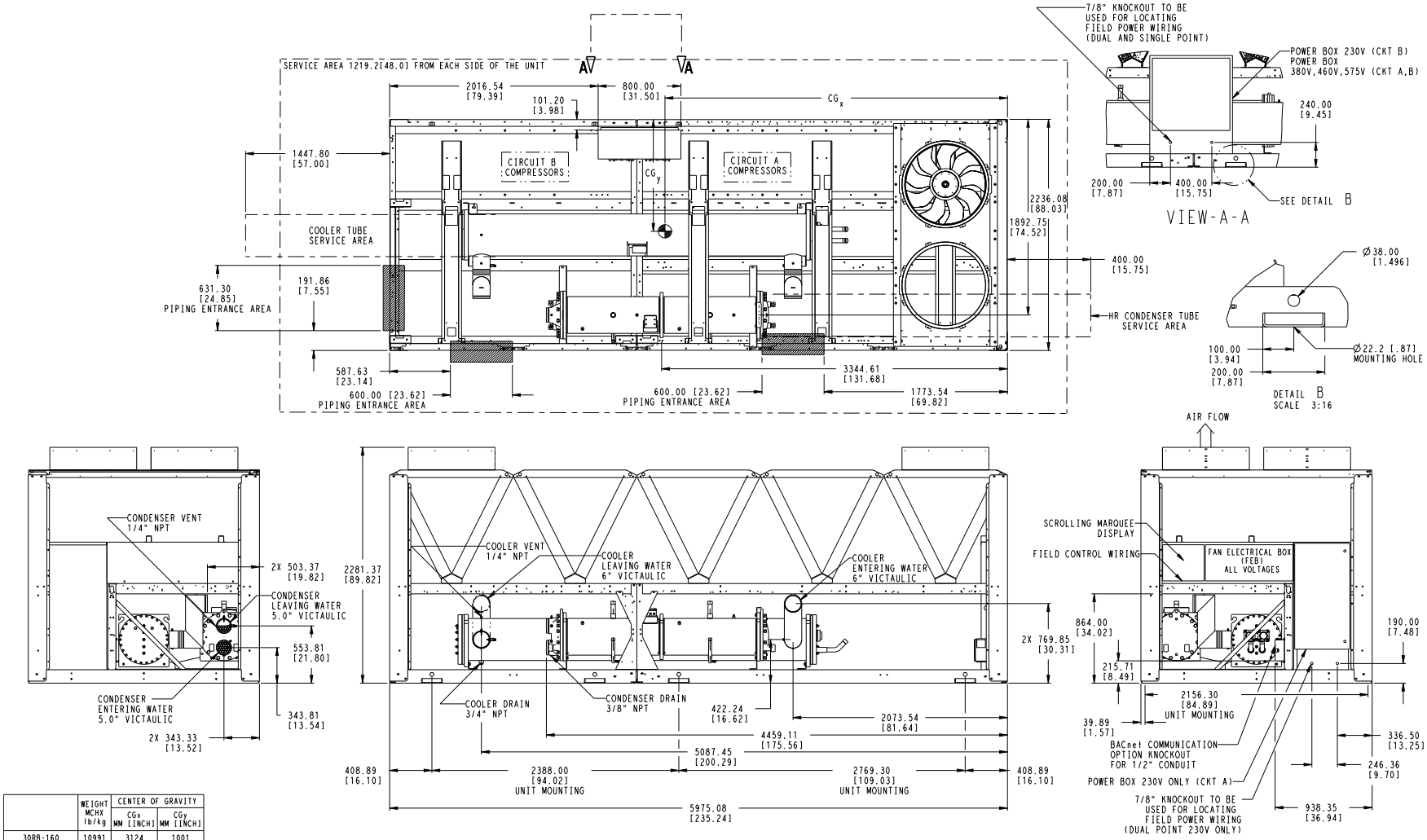

	WEIGHT MCHX lb/kg	CENTER OF GRAVITY	
		CGx MM [INCH]	CGy MM [INCH]
30RB-160 315A/B,330B	10991 4986	3124 [122.99]	1001 [39.41]
30RB-170 330A,345A/B,360B	11315 5133	3168 [124.74]	986 [38.82]

NOTES:
1. Unit must have clearances as follows:
   Top — Do not restrict.
   Sides and End — 6′ (1.8 m) from solid surface.
2. Temperature relief devices located on suction line, liquid line and filter drier of each circuit and have $^1/_4$″ flare connection.
3. Dimensions are in mm [inches].
4. Allow 8 ft (2.4 m) of service access on either side of unit for condenser coil removal.

LEGEND

HR — Heat Reclaim
MCHX — Microchannel Condenser Coil

Fig. 14 — 30RB160,170 Air-Cooled Chiller with Heat Reclaim Option Dimensions

NOTES:
1. Unit must have clearances as follows:
   Top — Do not restrict.
   Sides and End — 6′ (1.8 m) from solid surface.
2. All pumps have drains located at the bottom of volute for draining.
3. Temperature relief devices located on suction line, liquid line and filter drier of each circuit and have 1/4″ flare connection.
4. Units without a pump package have the same leaving water connection, Y and Z dimensions (entering water), and Pump Discharge X dimensions as units with a pump package.
5. Allow 8 ft (2.4 m) of service access on either side of unit for condenser coil removal.
6. Dimensions are in mm [inches].

MCHX — Microchannel Condenser Coil

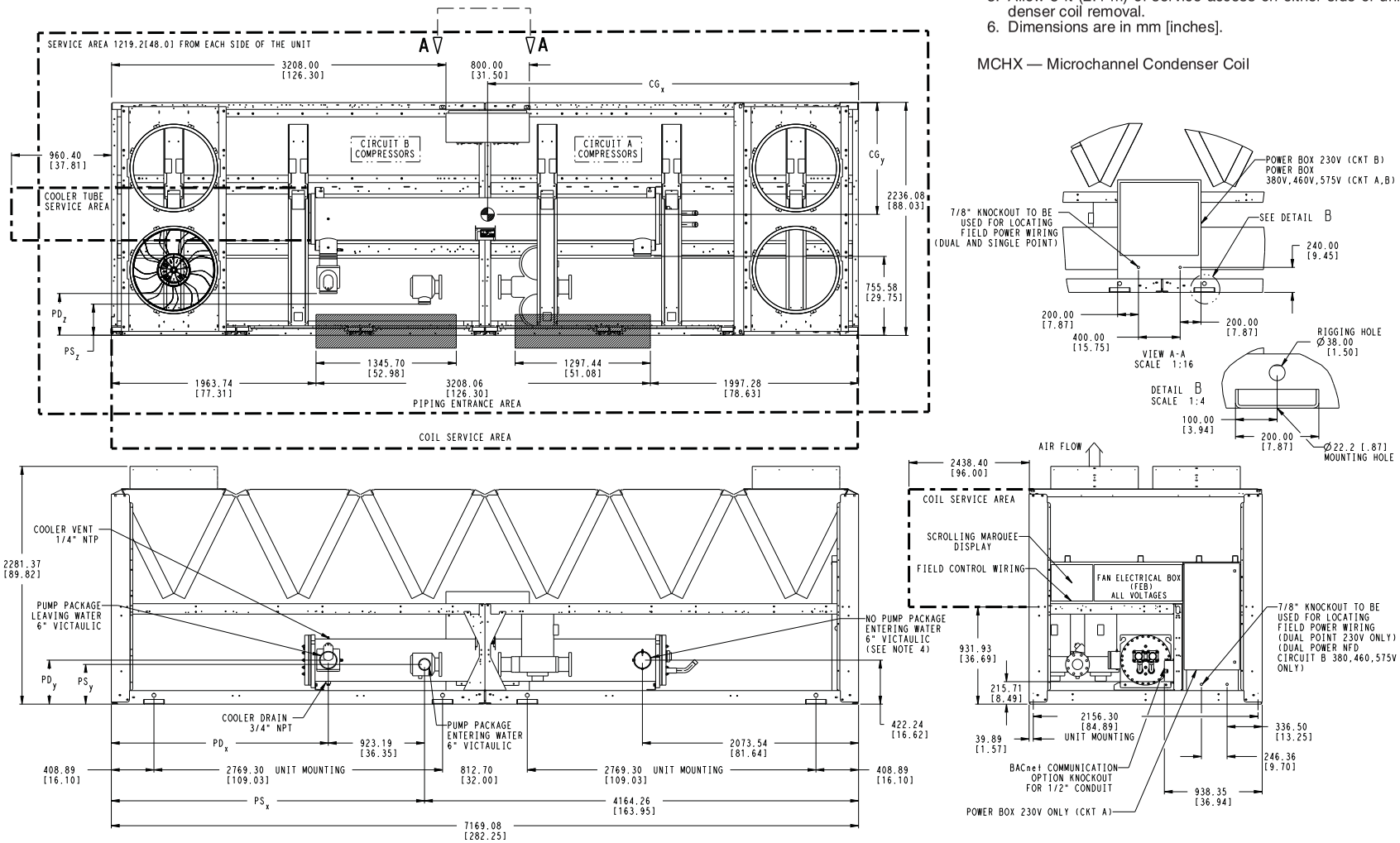

	WEIGHT CU/AL lb/kg	MAX WEIGHT CU/AL PUMP lb/kg	WEIGHT CU/CU lb/kg	MAX WEIGHT CU/CU PUMP lb/kg	WEIGHT MCHX lb/kg	MAX WEIGHT MCHX PUMP lb/kg	CENTER OF GRAVITY		PUMP SUCTION (PS)			PUMP DISCHARGE (PD)		
							CGx MM [INCH]	CGy MM [INCH]	X ±.25	Y ±.25	Z ±.25	X ±.25	Y ±.25	Z ±.25
30RB-190, 360A,390A/B	12013 5461	13258 6014	13460 6118	14705 14705	11064 5019	12309 5582	3578 [140.87]	974 [38.35]	3002 [118.2]	381 [15.0]	297.2 [11.7]	2080.3 [81.9]	421.6 [16.6]	231.1 [9.1]

Fig. 15 — 30RB190, 360A, 390A/B Air-Cooled Chiller Dimensions

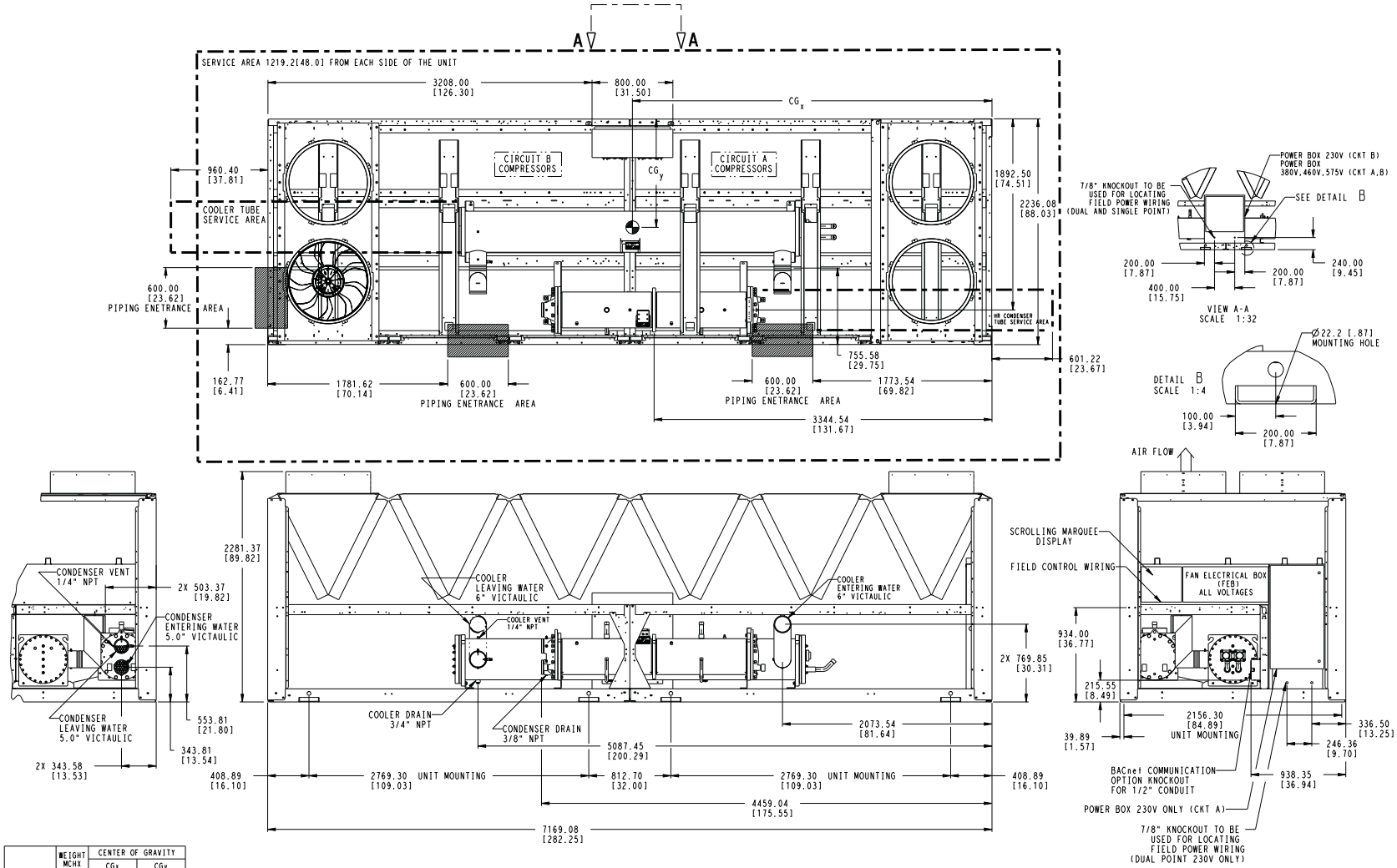

	WEIGHT MCHX lb/kg	CENTER OF GRAVITY	
		CGx MM [INCH]	CGy MM [INCH]
30RB-190, 360A,390A/B	12850 5706	3566 [140.39]	979 [38.54]

LEGEND

HR — Heat Reclaim
MCHX — Microchannel Condenser Coil

NOTES:
1. Unit must have clearances as follows:
   Top — Do not restrict.
   Sides and End — 6′ (1.8 m) from solid surface.
2. Temperature relief devices located on suction line, liquid line and filter drier of each circuit and have 1/4″ flare connection.
3. Dimensions are in mm [inches].
4. Allow 8 ft (2.4 m) of service access on either side of unit for condenser coil removal.

Fig. 16 — 30RB190 Air-Cooled Chiller with Heat Reclaim Option Dimensions

NOTES:
1. Unit must have clearances as follows:
   Top — Do not restrict.
   Sides and End — 6′ (1.8 m) from solid surface.
2. Temperature relief devices located on suction line, liquid line and filter drier of each circuit and have 1/4″ flare connection.
3. Dimensions are in mm [inches].
4. Allow 8 ft (2.4 m) of service access on either side of unit for condenser coil removal.

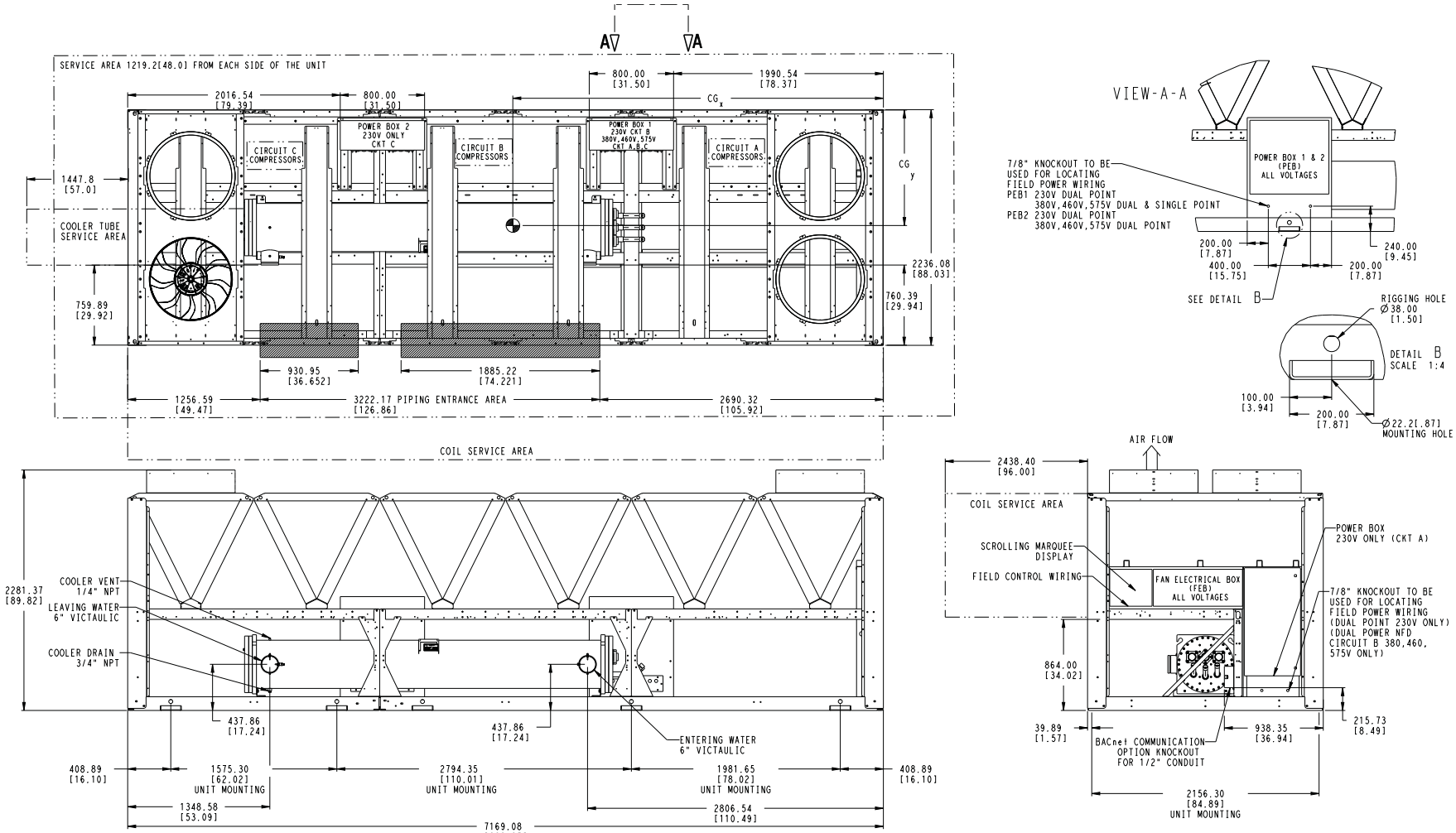

	WEIGHT CU/AL lb/kg	WEIGHT CU/CU lb/kg	WEIGHT MCHX lb/kg	CENTER OF GRAVITY CGx MM [INCH]	CGy MM [INCH]
30RB-210	13734 6243	15181 6901	12772 5793	3528 [138.90]	917 [36.10]
30RB-225	14067 6394	15514 7052	13093 5937	3588 [141.26]	906 [35.67]

MCHX — Microchannel Condenser Coil

Fig. 17 — 30RB210, 225 Air-Cooled Chiller Dimensions

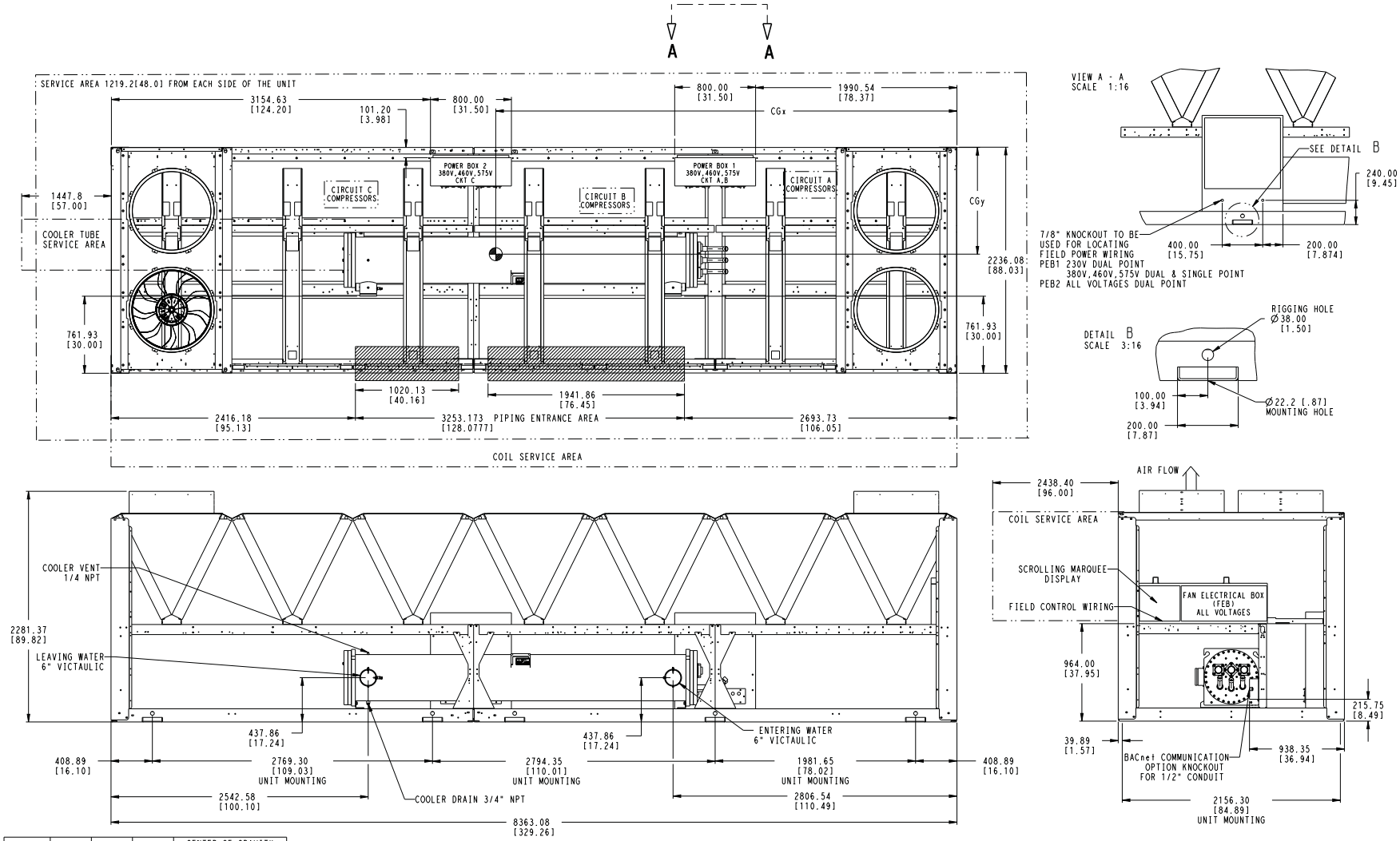

	WEIGHT CU/AL lb/kg	WEIGHT CU/CU lb/kg	WEIGHT MCHX lb/kg	CENTER OF GRAVITY	
				CGx MM [INCH]	CGy MM [INCH]
30RB-250	15468 7031	17157 7799	14349 6509	4022 [158.35]	910 [35.86]

NOTES:
1. Unit must have clearances as follows:
   Top — Do not restrict.
   Sides and End — 6′ (1.8 m) from solid surface.
2. Temperature relief devices located on suction line, liquid line and filter drier of each circuit and have 1/4″ flare connection.
3. Dimensions are in mm [inches].
4. Allow 8 ft (2.4 m) of service access on either side of unit for condenser coil removal.

MCHX — Microchannel Condenser Coil

Fig. 18 — 30RB250 Air-Cooled Chiller Dimensions

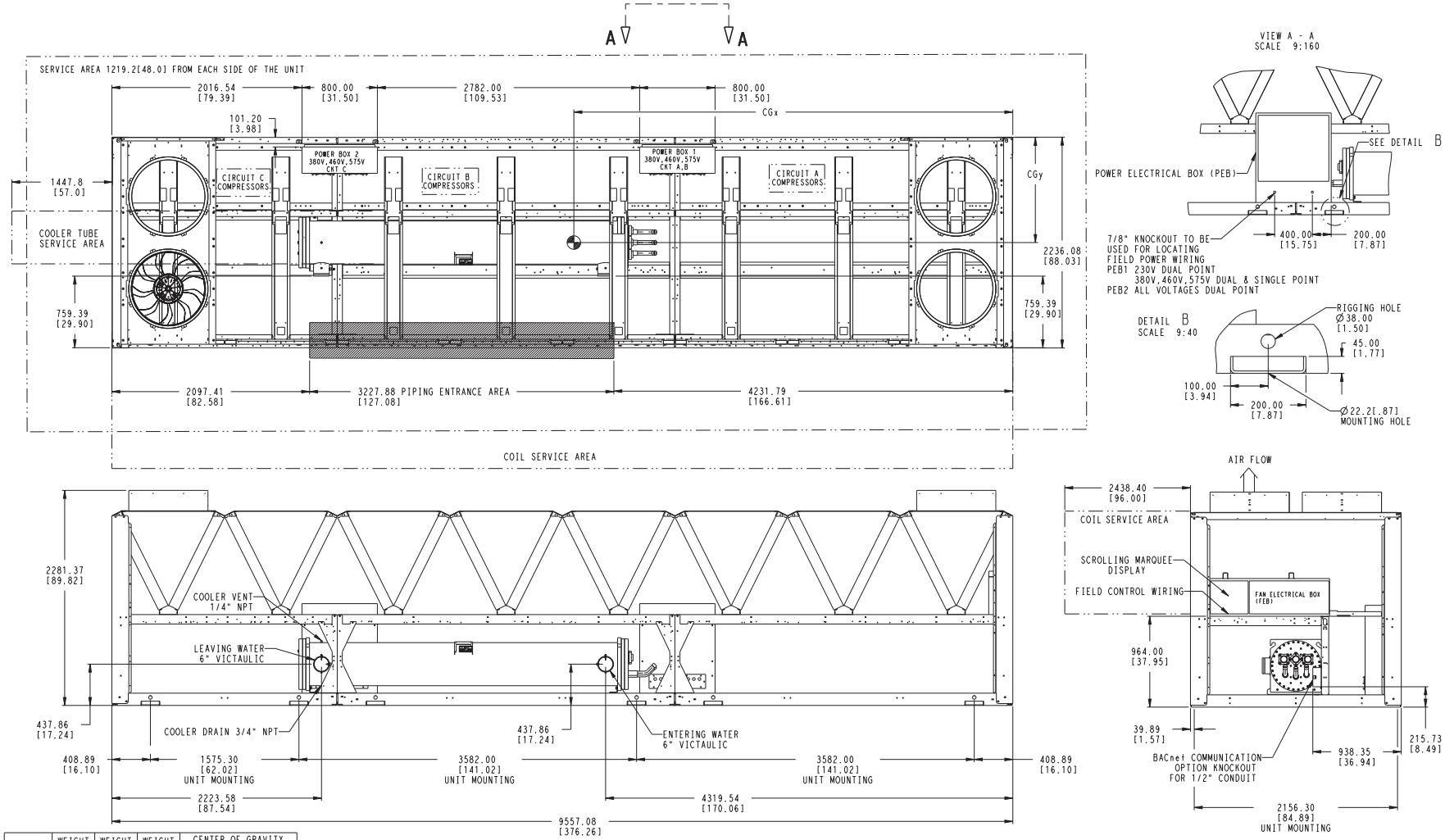

	WEIGHT CU/AL lb/kg	WEIGHT CU/CU lb/kg	WEIGHT MCHX lb/kg	CENTER OF GRAVITY	
				CGx MM [INCH]	CGy MM [INCH]
30RB-275	16915 7689	18845 8566	15647 7096	4857 [191.22]	914 [35.98]

NOTES:
1. Unit must have clearances as follows:
   Top — Do not restrict.
   Sides and End — 6′ (1.8 m) from solid surface.
2. Temperature relief devices located on suction line, liquid line and filter drier of each circuit and have 1/4″ flare connection.
3. Dimensions are in mm [inches].
4. Allow 8 ft (2.4 m) of service access on either side of unit for condenser coil removal.

MCHX — Microchannel Condenser Coil

Fig. 19 — 30RB275 Air-Cooled Chiller Dimensions

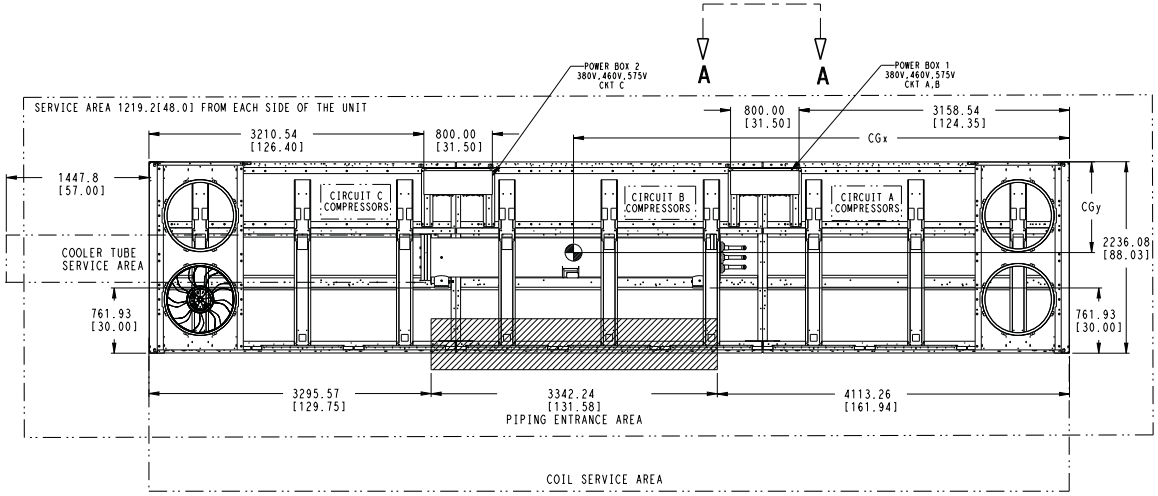

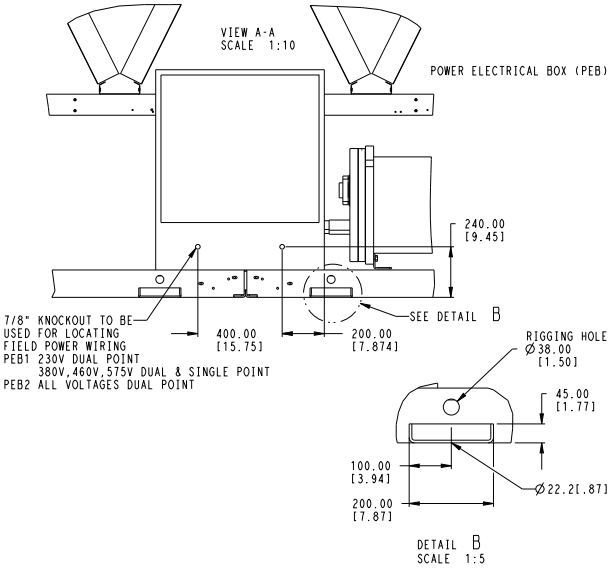

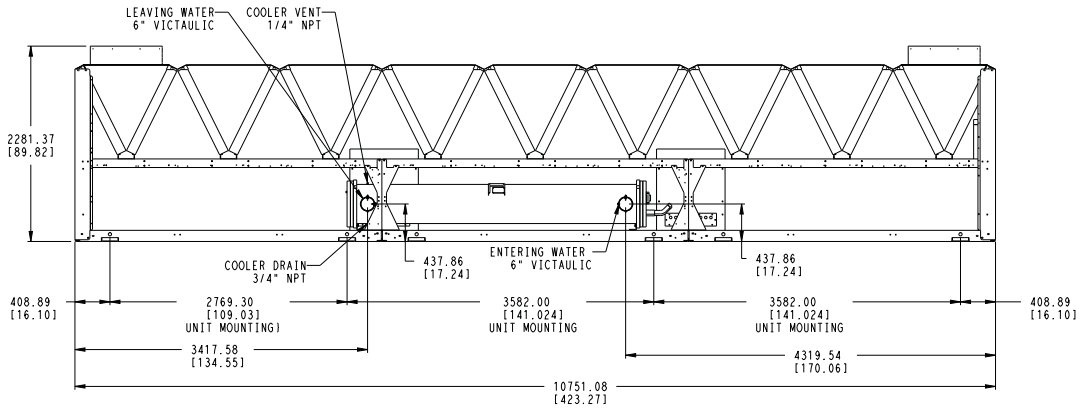

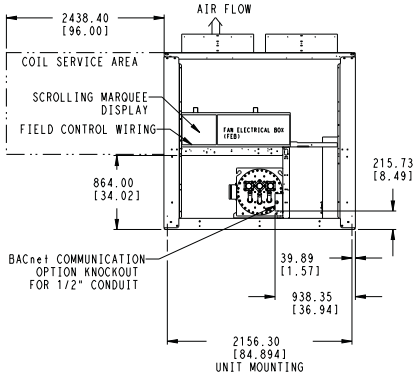

	WEIGHT CU/AL lb/kg	WEIGHT CU/CU lb/kg	WEIGHT MCHX lb/kg	CENTER OF GRAVITY	
				CGx MM [INCH]	CGy MM [INCH]
30RB-300	18306 8321	20477 9308	16893 7659	5317 [203.33]	916 [36.06]

NOTES:
1. Unit must have clearances as follows:
   Top — Do not restrict.
   Sides and End — 6′ (1.8 m) from solid surface.
2. Temperature relief devices located on suction line, liquid line and filter drier of each circuit and have 1/4″ flare connection.
3. Dimensions are in mm [inches].
4. Allow 8 ft (2.4 m) of service access on either side of unit for condenser coil removal.

MCHX — Microchannel Condenser Coil

Fig. 20 — 30RB300 Air-Cooled Chiller Dimensions

AL/CU COIL UNITS WITHOUT PUMP — ENGLISH

UNIT 30RB	MOUNTING WEIGHT (lb) No Pump Al/Cu*				
	A	B	C	D	Total
060	869	913	1193	1136	4111
070	891	936	1275	1215	4317
080	982	958	1313	1346	4600
090	1159	1397	1845	1531	5932
100	1173	1431	1952	1600	6155
110	1319	1448	1964	1788	6519

UNIT 30RB	MOUNTING WEIGHT (lb) No Pump Al/Cu*						
	A	B	C	D	E	F	Total
120	731	1762	809	985	2347	1056	7,690
130	728	1850	818	1168	2531	949	8,045
150	893	2085	888	1228	2864	1217	9,174
160	1106	2189	1104	1483	2923	1463	10,266
170	1142	2220	1108	1487	3039	1606	10,601

UNIT 30RB	MOUNTING WEIGHT (lb) No Pump Al/Cu*								
	A	B	C	D	E	F	G	H	Total
190	1094	1388	1484	1101	1479	2004	1938	1526	12,013
210	916	1804	2139	853	1311	3044	2440	1228	13,734
225	947	1836	2144	855	1313	3049	2569	1354	14,067
250	1122	2271	2133	850	1307	3035	3166	1584	15,468
275	627	2269	2805	1292	1866	3808	3169	1080	16,915
300	899	2602	2792	1284	1859	3795	3640	1435	18,306

AL/CU COIL UNITS WITHOUT PUMP — SI

UNIT 30RB	MOUNTING WEIGHT (kg) No Pump Al/Cu*				
	A	B	C	D	Total
060	395	415	542	516	1869
070	405	425	580	552	1962
080	447	436	597	612	2091
090	527	635	839	696	2697
100	533	650	887	727	2798
110	600	658	893	813	2963

UNIT 30RB	MOUNTING WEIGHT (kg) No Pump Al/Cu*						
	A	B	C	D	E	F	Total
120	332	799	367	447	1065	479	3488
130	330	839	371	530	1148	431	3649
150	405	946	403	557	1299	552	4161
160	503	995	502	674	1328	665	4666
170	519	1009	503	676	1381	730	4819

UNIT 30RB	MOUNTING WEIGHT (kg) No Pump Al/Cu*								
	A	B	C	D	E	F	G	H	Total
190	497	631	674	500	672	911	881	694	5461
210	416	820	972	388	596	1384	1109	558	6243
225	431	835	975	389	597	1386	1168	615	6394
250	510	1032	970	386	594	1380	1439	720	7031
275	285	1032	1275	587	848	1731	1440	491	7689
300	409	1183	1269	584	845	1725	1654	652	8321

CU/CU COIL UNITS WITHOUT PUMP — ENGLISH

UNIT 30RB	MOUNTING WEIGHT (lb) No Pump Cu/Cu†				
	A	B	C	D	Total
060	992	1037	1311	1254	4,593
070	1014	1059	1393	1333	4,799
080	1106	1081	1431	1464	5,082
090	1342	1584	2020	1711	6,656
100	1355	1619	2126	1780	6,879
110	1503	1635	2139	1967	7,243

UNIT 30RB	MOUNTING WEIGHT (lb) No Pump Cu/Cu†						
	A	B	C	D	E	F	Total
120	837	1980	917	1088	2551	1161	8,534
130	850	2100	940	1288	2764	1069	9,010
150	1015	2334	1009	1348	3097	1336	10,139
160	1252	2497	1266	1642	3218	1599	11,472
170	1289	2528	1270	1645	3334	1742	11,807

UNIT 30RB	MOUNTING WEIGHT (lb) No Pump Cu/Cu†								
	A	B	C	D	E	F	G	H	Total
190	1257	1595	1691	1263	1638	2199	2133	1684	13,460
210	1018	2045	2410	978	1427	3297	2681	1326	15,181
225	1049	2078	2415	981	1429	3301	2810	1452	15,514
250	1283	2577	2404	976	1423	3288	3463	1744	17,157
275	732	2554	3193	1501	2059	4185	3446	1175	18,845
300	1064	2950	3179	1494	2053	4172	3974	1591	20,477

CU/CU COIL UNITS WITHOUT PUMP — SI

UNIT 30RB	MOUNTING WEIGHT (kg) No Pump Cu/Cu†				
	A	B	C	D	Total
060	451	471	596	570	2088
070	461	481	633	606	2181
080	503	491	651	665	2310
090	610	720	918	778	3026
100	616	736	966	809	3127
110	683	743	972	894	3292

UNIT 30RB	MOUNTING WEIGHT (kg) No Pump Cu/Cu†						
	A	B	C	D	E	F	Total
120	380	898	416	494	1157	527	3871
130	386	952	426	584	1254	485	4087
150	461	1059	458	611	1405	606	4599
160	569	1135	575	746	1463	727	5215
170	586	1149	577	748	1516	792	5367

UNIT 30RB	MOUNTING WEIGHT (kg) No Pump Cu/Cu†								
	A	B	C	D	E	F	G	H	Total
190	571	725	769	574	744	1000	970	765	6118
210	463	930	1095	445	649	1498	1219	603	6901
225	477	944	1098	446	650	1501	1277	660	7052
250	583	1171	1093	444	647	1494	1574	793	7799
275	333	1161	1451	682	936	1902	1566	534	8566
300	484	1341	1445	679	933	1896	1807	723	9308

MCHX COIL UNITS WITHOUT PUMP — ENGLISH

UNIT 30RB	MOUNTING WEIGHT (lb) No Pump MCHX**				
	A	B	C	D	Total
060	800	840	1098	1045	3,783
070	821	862	1175	1120	3,978
080	911	889	1218	1249	4,267
090	1065	1283	1695	1406	5,449
100	1079	1316	1796	1472	5,663
110	1219	1339	1816	1653	6,027

UNIT 30RB	MOUNTING WEIGHT (lb) No Pump MCHX**						
	A	B	C	D	E	F	Total
120	660	1614	737	915	2210	985	7,119
130	648	1683	738	1088	2377	870	7,402
150	810	1914	805	1146	2706	1136	8,517
160	1020	2020	1019	1368	2698	1350	9,475
170	1055	2052	1024	1374	2809	1485	9,799

UNIT 30RB	MOUNTING WEIGHT (lb) No Pump MCHX**								
	A	B	C	D	E	F	G	H	Total
190	1007	1278	1367	1014	1362	1846	1785	1405	11,064
210	852	1677	1989	793	1219	2831	2269	1142	12,772
225	881	1709	1996	796	1222	2838	2391	1260	13,093
250	1041	2107	1979	789	1212	2815	2937	1469	14,349
275	580	2099	2594	1195	1726	3523	2931	999	15,647
300	830	2401	2576	1185	1716	3502	3359	1324	16,893

MCHX COIL UNITS WITHOUT PUMP — SI

UNIT 30RB	MOUNTING WEIGHT (kg) No Pump MCHX**				
	A	B	C	D	Total
060	363	381	498	474	1716
070	372	391	533	508	1804
080	413	403	552	566	1934
090	483	582	769	638	2472
100	489	597	815	668	2569
110	553	607	824	750	2734

UNIT 30RB	MOUNTING WEIGHT (kg) No Pump MCHX**						
	A	B	C	D	E	F	Total
120	299	732	334	415	1002	447	3229
130	294	763	335	493	1078	394	3358
150	367	868	365	520	1227	515	3863
160	463	916	492	620	1224	612	4297
170	478	931	464	623	1274	673	4443

UNIT 30RB	MOUNTING WEIGHT (kg) No Pump MCHX**								
	A	B	C	D	E	F	G	H	Total
190	457	580	620	460	618	837	810	637	5019
210	386	761	902	360	553	1284	1029	518	5793
225	400	775	905	361	554	1287	1084	571	5937
250	472	956	898	358	550	1277	1332	666	6509
275	263	952	1176	542	783	1598	1329	453	7096
300	376	1089	1168	537	778	1588	1523	600	7659

*Condenser Coil: Aluminum Fins/Copper Tubing.
†Condenser Coil: Copper Fins/Copper Tubing.
** Condenser Coil: Microchannel (MCHX) Design.

Fig. 21 — Unit Weights

AL/CU COIL UNITS WITH SINGLE PUMP — ENGLISH

UNIT 30RB	MOUNTING WEIGHT (lb) Single Pump Al/Cu*				
	A	B	C	D	Total
060	1085	1127	1230	1184	4626
070	1107	1150	1312	1263	4832
080	1193	1164	1354	1388	5100
090	1353	1620	1885	1575	6432
100	1366	1655	1991	1644	6655
110	1565	1653	1974	1868	7059

UNIT 30RB	MOUNTING WEIGHT (lb) Single Pump Al/Cu*						
	A	B	C	D	E	F	Total
120	731	2062	960	961	2460	1056	8,230
130	728	2149	969	1144	2645	949	8,585
150	893	2486	1031	1165	3035	1217	9,827
160	1238	2583	1104	1483	3155	1357	10,919
170	1279	2609	1108	1487	3276	1495	11,254

UNIT 30RB	MOUNTING WEIGHT (lb) Single Pump Al/Cu*								
	A	B	C	D	E	F	G	H	Total
190	1094	1510	1889	1101	1479	2178	1890	1526	12,666

AL/CU COIL UNITS WITH SINGLE PUMP — SI

UNIT 30RB	MOUNTING WEIGHT (kg) Single Pump Al/Cu*				
	A	B	C	D	Total
060	493	512	559	538	2103
070	503	523	597	574	2196
080	542	529	616	631	2318
090	615	736	857	716	2924
100	621	752	905	747	3025
110	711	751	897	849	3209

UNIT 30RB	MOUNTING WEIGHT (kg) Single Pump Al/Cu*						
	A	B	C	D	E	F	Total
120	332	935	435	436	1116	479	3733
130	330	975	440	519	1200	431	3894
150	405	1128	468	528	1377	552	4458
160	563	1174	502	674	1434	617	4963
170	582	1186	503	676	1489	679	5116

UNIT 30RB	MOUNTING WEIGHT (kg) Single Pump Al/Cu*								
	A	B	C	D	E	F	G	H	Total
190	497	686	858	500	672	990	859	694	5757

CU/CU COIL UNITS WITH SINGLE PUMP — ENGLISH

UNIT 30RB	MOUNTING WEIGHT (lb) Single Pump Cu/Cu†				
	A	B	C	D	Total
060	1208	1250	1348	1302	5,108
070	1230	1273	1430	1381	5,314
080	1317	1287	1472	1506	5,582
090	1537	1806	2060	1753	7,156
100	1549	1841	2166	1823	7,379
110	1749	1839	2150	2045	7,783

UNIT 30RB	MOUNTING WEIGHT (lb) Single Pump Cu/Cu†						
	A	B	C	D	E	F	Total
120	837	2280	1068	1065	2664	1161	9,074
130	850	2399	1091	1264	2877	1069	9,550
150	1015	2735	1153	1284	3269	1336	10,792
160	1382	2894	1266	1642	3447	1495	12,125
170	1424	2920	1270	1645	3569	1633	12,460

UNIT 30RB	MOUNTING WEIGHT (lb) Single Pump Cu/Cu†								
	A	B	C	D	E	F	G	H	Total
190	1257	1718	2095	1263	1638	2374	2084	1684	14,113

CU/CU COIL UNITS WITH SINGLE PUMP — SI

UNIT 30RB	MOUNTING WEIGHT (kg) Single Pump Cu/Cu†				
	A	B	C	D	Total
060	549	568	613	592	2322
070	559	579	650	628	2415
080	599	585	669	684	2537
090	699	821	937	797	3253
100	704	837	985	828	3354
110	795	836	977	930	3538

UNIT 30RB	MOUNTING WEIGHT (kg) Single Pump Cu/Cu†						
	A	B	C	D	E	F	Total
120	380	1034	484	483	1209	527	4116
130	386	1088	495	573	1305	485	4332
150	461	1241	523	583	1483	606	4895
160	628	1315	575	746	1567	680	5511
170	647	1327	577	748	1622	742	5664

UNIT 30RB	MOUNTING WEIGHT (kg) Single Pump Cu/Cu†								
	A	B	C	D	E	F	G	H	Total
190	571	781	952	574	744	1079	947	765	6415

*Condenser Coil: Aluminum Fins/Copper Tubing.
†Condenser Coil: Copper Fins/Copper Tubing.
** Condenser Coil: Microchannel (MCHX) Design.

30RB060-110

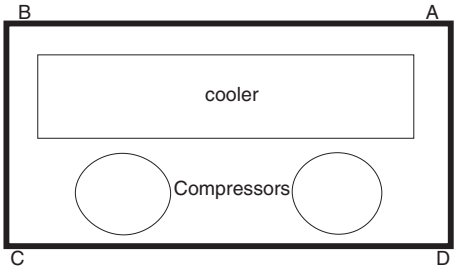

30RB120-150

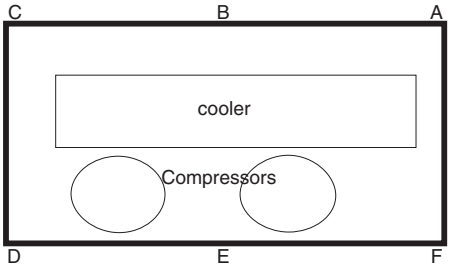

30RB160, 170, 315A, 315B, 330A, 330B, 345A, 345B, 360B

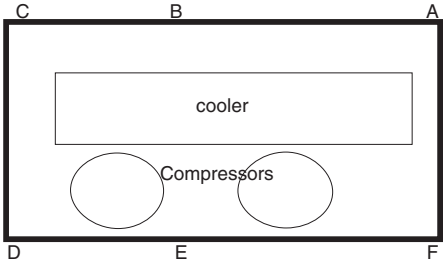

30RB190-300, 360A, 390A, 390B

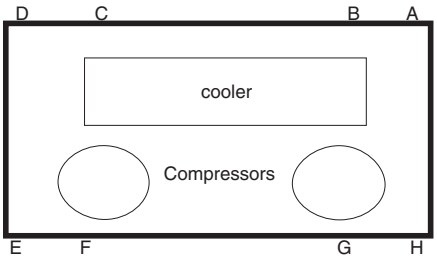

NOTE: Corner weights are calculated at mounting locations. Refer to Fig. 2-20 (certified drawings) for mounting locations.

Fig. 21 — Unit Weights (cont)

MCHX COIL UNITS WITH SINGLE PUMP — ENGLISH

UNIT 30RB	MOUNTING WEIGHT (lb) Single Pump MCHX**				
	A	B	C	D	Total
060	1008	1047	1143	1100	4298
070	1030	1069	1220	1174	4493
080	1115	1088	1266	1298	4767
090	1251	1498	1743	1457	5949
100	1265	1532	1844	1522	6163
110	1456	1537	1836	1738	6567

UNIT 30RB	MOUNTING WEIGHT (lb) Single Pump MCHX**						
	A	B	C	D	E	F	Total
120	660	1914	887	891	2322	985	7,659
130	648	1982	888	1064	2490	870	7,942
150	810	2316	948	1083	2877	1136	9,170
160	1148	2395	1024	1376	2926	1259	10,128
170	1188	2423	1029	1381	3043	1388	10,452

UNIT 30RB	MOUNTING WEIGHT (lb) Single Pump MCHX**								
	A	B	C	D	E	F	G	H	Total
190	1012	1396	1747	1019	1368	2015	1748	1412	11,717

MCHX COIL UNITS WITH SINGLE PUMP — SI

UNIT 30RB	MOUNTING WEIGHT (kg) Single Pump MCHX**				
	A	B	C	D	Total
060	457	475	518	499	1949
070	467	485	553	532	2037
080	506	493	574	589	2162
090	567	679	790	661	2697
100	574	695	836	690	2795
110	660	697	833	788	2978

UNIT 30RB	MOUNTING WEIGHT (kg) Single Pump MCHX**						
	A	B	C	D	E	F	Total
120	299	868	402	404	1053	447	3474
130	294	899	403	483	1129	394	3603
150	367	1051	430	491	1305	515	4160
160	521	1086	464	624	1327	571	4593
170	539	1099	467	626	1380	629	4740

UNIT 30RB	MOUNTING WEIGHT (kg) Single Pump MCHX**								
	A	B	C	D	E	F	G	H	Total
190	459	633	792	462	620	914	763	640	5313

AL/CU COIL UNITS WITH DUAL PUMP — ENGLISH

UNIT 30RB	MOUNTING WEIGHT (lb) Dual Pump Al/Cu*				
	A	B	C	D	Total
060	1218	1259	1254	1213	4,944
070	1240	1281	1336	1293	5,150
080	1372	1339	1389	1424	5,523
090	1518	1808	1919	1611	6,855
100	1530	1843	2025	1680	7,078
110	1741	1796	1983	1922	7,442

UNIT 30RB	MOUNTING WEIGHT (lb) Dual Pump Al/Cu*						
	A	B	C	D	E	F	Total
120	731	2281	1061	951	2534	1056	8,613
130	728	2367	1071	1133	2719	949	8,968
150	893	2864	1147	1122	3177	1217	10,419
160	1336	2962	1104	1483	3344	1282	11,511
170	1383	2983	1108	1487	3471	1415	11,846

UNIT 30RB	MOUNTING WEIGHT (lb) Dual Pump Al/Cu*								
	A	B	C	D	E	F	G	H	Total
190	1094	1588	2288	1101	1479	2303	1879	1526	13,258

AL/CU COIL UNITS WITH DUAL PUMP — SI

UNIT 30RB	MOUNTING WEIGHT (kg) Dual Pump Al/Cu*				
	A	B	C	D	Total
060	554	572	570	552	2247
070	564	582	607	588	2341
080	624	609	631	647	2511
090	690	822	872	732	3116
100	695	838	920	764	3217
110	791	817	901	874	3383

UNIT 30RB	MOUNTING WEIGHT (kg) Dual Pump Al/Cu*						
	A	B	C	D	E	F	Total
120	332	1035	481	431	1149	479	3907
130	330	1074	486	514	1233	431	4068
150	405	1299	520	509	1441	552	4726
160	607	1347	502	674	1520	583	5232
170	629	1356	503	676	1578	643	5385

UNIT 30RB	MOUNTING WEIGHT (kg) Dual Pump Al/Cu*								
	A	B	C	D	E	F	G	H	Total
190	497	722	1040	500	672	1047	854	1526	6014

CU/CU COIL UNITS WITH DUAL PUMP — ENGLISH

UNIT 30RB	MOUNTING WEIGHT (lb) Dual Pump Cu/Cu†				
	A	B	C	D	Total
060	1341	1382	1371	1331	5,426
070	1363	1405	1453	1411	5,632
080	1495	1462	1507	1541	6,005
090	1702	1994	2095	1788	7,579
100	1714	2030	2201	1858	7,802
110	1926	1982	2160	2099	8,166

UNIT 30RB	MOUNTING WEIGHT (lb) Dual Pump Cu/Cu†						
	A	B	C	D	E	F	Total
120	837	2498	1169	1054	2739	1161	9,457
130	850	2616	1193	1252	2953	1069	9,933
150	1015	3112	1270	1240	3411	1336	11,384
160	1481	3273	1266	1642	3637	1420	12,717
170	1527	3294	1270	1645	3763	1553	13,052

UNIT 30RB	MOUNTING WEIGHT (lb) Dual Pump Cu/Cu†								
	A	B	C	D	E	F	G	H	Total
190	1257	1799	2492	1263	1638	2502	2071	1684	14,705

CU/CU COIL UNITS WITH DUAL PUMP — SI

UNIT 30RB	MOUNTING WEIGHT (kg) Dual Pump Cu/Cu†				
	A	B	C	D	Total
060	610	628	623	605	2466
070	620	638	661	641	2560
080	680	665	685	701	2730
090	774	906	952	813	3445
100	779	923	1000	845	3547
110	875	901	982	954	3712

UNIT 30RB	MOUNTING WEIGHT (kg) Dual Pump Cu/Cu†						
	A	B	C	D	E	F	Total
120	380	1133	530	478	1242	527	4290
130	386	1187	541	568	1339	485	4506
150	461	1412	576	562	1547	606	5164
160	673	1488	575	746	1653	646	5781
170	694	1497	577	748	1710	706	5933

UNIT 30RB	MOUNTING WEIGHT (kg) Dual Pump Cu/Cu†								
	A	B	C	D	E	F	G	H	Total
190	571	818	1133	574	744	1137	941	1684	6669

MCHX COIL UNITS WITH DUAL PUMP — ENGLISH

UNIT 30RB	MOUNTING WEIGHT (lb) Dual Pump MCHX**				
	A	B	C	D	Total
060	1137	1175	1171	1133	4,616
070	1158	1197	1248	1208	4,811
080	1289	1258	1305	1338	5,190
090	1411	1680	1784	1497	6,372
100	1424	1715	1884	1563	6,586
110	1626	1677	1852	1795	6,950

UNIT 30RB	MOUNTING WEIGHT (lb) Dual Pump MCHX**						
	A	B	C	D	E	F	Total
120	660	2134	987	882	2396	985	8,042
130	648	2201	989	1054	2564	870	8,325
150	810	2695	1063	1041	3017	1136	9,762
160	1244	2759	1028	1381	3114	1194	10,720
170	1289	2781	1033	1386	3236	1319	11,044

UNIT 30RB	MOUNTING WEIGHT (lb) Dual Pump MCHX**								
	A	B	C	D	E	F	G	H	Total
190	1016	1474	2124	1022	1373	2138	1745	1417	12,309

MCHX COIL UNITS WITH DUAL PUMP — SI

UNIT 30RB	MOUNTING WEIGHT (kg) Dual Pump MCHX**				
	A	B	C	D	Total
060	516	533	531	514	2094
070	525	543	566	548	2182
080	585	571	592	607	2355
090	640	762	809	679	2890
100	646	778	854	709	2987
110	737	761	840	814	3152

UNIT 30RB	MOUNTING WEIGHT (kg) Dual Pump MCHX**						
	A	B	C	D	E	F	Total
120	299	968	448	400	1087	447	3648
130	294	998	449	478	1163	394	3776
150	367	1223	482	472	1368	515	4428
160	564	1251	466	626	1412	541	4860
170	585	1261	468	629	1468	598	5009

UNIT 30RB	MOUNTING WEIGHT (kg) Dual Pump MCHX**								
	A	B	C	D	E	F	G	H	Total
190	461	668	963	463	623	970	791	643	5582

*Condenser Coil: Aluminum Fins/Copper Tubing.
†Condenser Coil: Copper Fins/Copper Tubing.
** Condenser Coil: Microchannel (MCHX) Design.

Fig. 21 — Unit Weights (cont)

MCHX COIL UNITS WITH HEAT RECLAIM — ENGLISH

UNIT 30RB	MOUNTING WEIGHT (lb) Heat Reclaim MCHX**				
	A	B	C	D	Total
060	1185	1175	1166	1176	4703
070	1204	1196	1245	1253	4898
080	1302	1215	1289	1381	5187
090	1507	1689	1776	1584	6555
100	1516	1723	1878	1652	6769
110	1671	1732	1899	1832	7133

UNIT 30RB	MOUNTING WEIGHT (lb) Heat Reclaim MCHX**						
	A	B	C	D	E	F	Total
120	842	2353	889	863	2492	966	8405
130	846	2497	905	1027	2685	854	8814
150	1017	2723	969	1089	3019	1111	9929
160	1229	2841	1168	1314	3127	1312	10991
170	1268	2865	1171	1316	3245	1450	11315

UNIT 30RB	MOUNTING WEIGHT (lb) Heat Reclaim MCHX**								
	A	B	C	D	E	F	G	H	Total
190	962	1311	1461	937	1519	2620	2296	1474	12580

*Condenser Coil: Aluminum Fins/Copper Tubing.
†Condenser Coil: Copper Fins/Copper Tubing.
** Condenser Coil: Microchannel Design.

MCHX COIL UNITS WITH HEAT RECLAIM — SI

UNIT 30RB	MOUNTING WEIGHT (kg) Heat Reclaim MCHX**				
	A	B	C	D	Total
060	538	533	529	533	2133
070	546	542	565	568	2222
080	590	551	585	627	2353
090	683	766	805	718	2974
100	688	782	852	749	3071
110	758	786	861	831	3236

UNIT 30RB	MOUNTING WEIGHT (kg) Heat Reclaim MCHX**						
	A	B	C	D	E	F	Total
120	382	1067	403	391	1130	438	3813
130	384	1133	411	466	1218	387	3998
150	462	1235	440	494	1370	504	4504
160	557	1289	530	596	1419	595	4986
170	575	1300	531	597	1472	658	5133

UNIT 30RB	MOUNTING WEIGHT (kg) Heat Reclaim MCHX**								
	A	B	C	D	E	F	G	H	Total
190	436	595	663	425	689	1188	1041	669	5706

30RB060-110

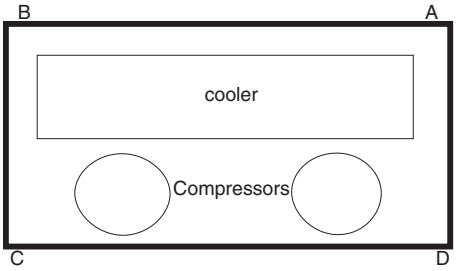

30RB120-150

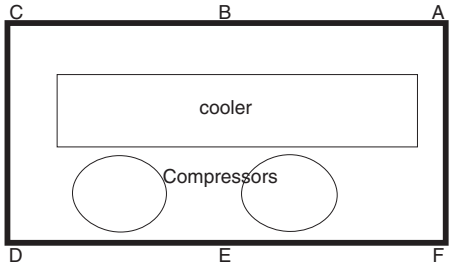

30RB160, 170, 315A, 315B, 330A, 330B, 345A, 345B, 360B

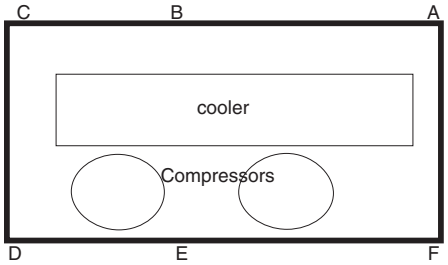

30RB190-300, 360A, 390A, 390B

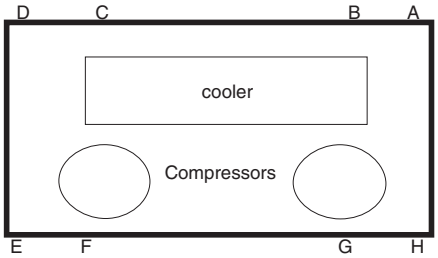

Fig. 21 — Unit Weights (cont)

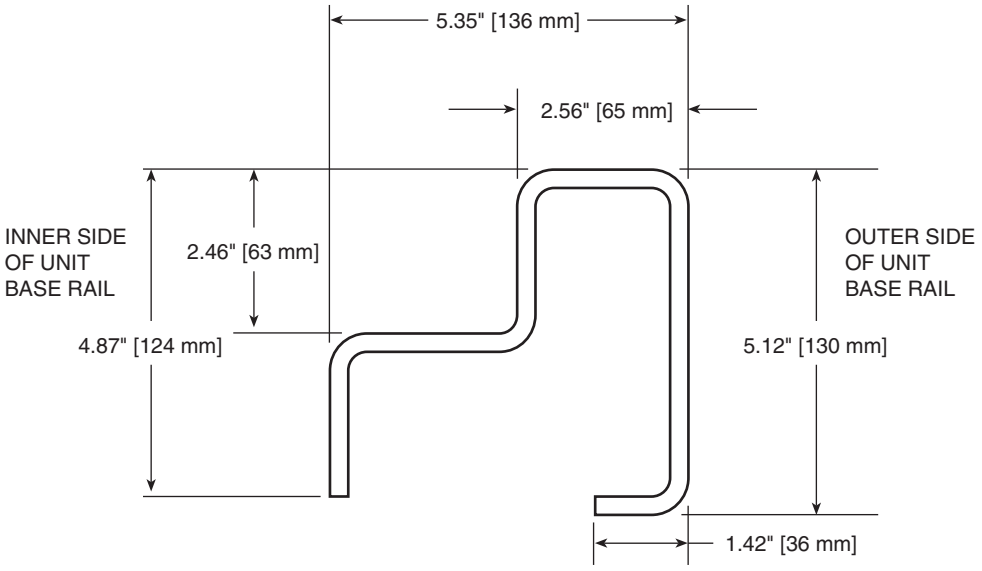

Fig. 22 — 30RB Base Rail Cross Section

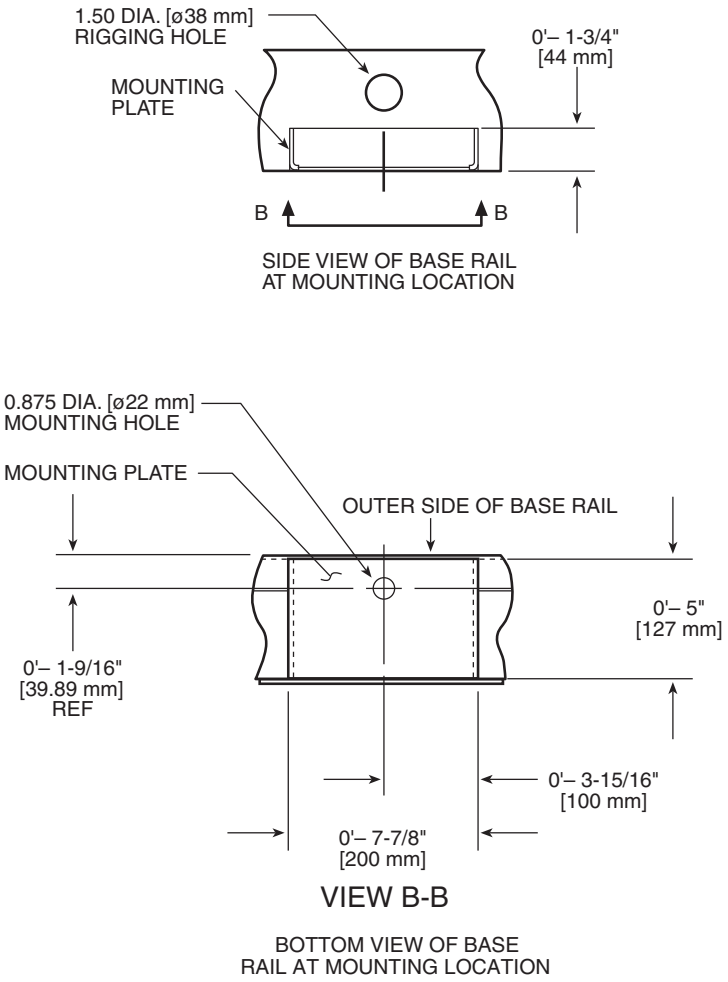

Fig. 23 — 30RB Mounting Plate

Table 3A — Physical Data, 30RB060-300 — English

UNIT 30RB	060	070	080	090	100	110	120	130	150
OPERATING WEIGHT (lb)*									
Al-Cu Condenser Coil	4111	4317	4600	5932	6155	6519	7690	8045	9174
Cu-Cu Condenser Coil	4593	4799	5082	6656	6879	7243	8534	9010	10139
MCHX Condenser Coil	3783	3978	4267	5449	5663	6027	7119	7402	8517
REFRIGERANT TYPE	R-410A, EXV Controlled System								
Refrigerant Charge (lb)									
Std Coil, Ckt A/Ckt B/Ckt C	90/41/—	112/41/—	69/69/—	96/76/—	96/96/—	96/106/—	96/133/—	133/106/—	133/133/—
MCHX Coil, Ckt A/Ckt B/Ckt C	40/20/—	40/20/—	33/33/—	40/40/—	40/42/—	40/51/—	43/57/—	54/43/—	56/62/—
COMPRESSORS	Scroll, Hermetic								
Quantity	3	3	4	4	4	5	5	6	6
Speed (rpm)	3500								
(Qty) Compressor Model Number Ckt A	(2) SH240	(2) SH295	(2) SH240	(2) SH295	(2) SH295	(2) SH295	(2) SH295	(3) SH295	(3) SH295
(Qty) Compressor Model Number Ckt B	(1) SH240	(1) SH240	(2) SH240	(2) SH240	(2) SH295	(3) SH240	(3) SH295	(3) SH240	(3) SH295
(Qty) Compressor Model Number Ckt C	N/A	N/A	N/A	N/A	N/A	N/A	N/A	N/A	N/A
Oil Charge (Pt, Ckt A/Ckt B/Ckt C)	26.2/13.1/—	29.2/13.1/—	26.2/26.2/—	29.2/26.2/—	29.2/29.2/—	29.2/39.4/—	29.2/43.8/—	43.8/39.4/—	43.8/43.8/—
No. Capacity Steps									
Standard	3	3	4	4	4	5	5	6	6
Optional (Maximum)	4	4	5	5	5	6	6	7	7
Minimum Capacity Step (%)									
Standard	33	29	25	22	25	18	20	15	17
Optional	22	19	16	14	18	12	14	10	12
Capacity (%)									
Ckt A	67	71	50	56	50	45	40	56	50
Ckt B	33	29	50	44	50	55	60	44	50
Ckt C	N/A	N/A	N/A	N/A	N/A	N/A	N/A	N/A	N/A
COOLER	Direct Expansion, Shell and Tube Type								
Weight (empty, lb)	715	715	856	856	856	970	970	970	1518
Net Fluid Volume (gal)	28.2	28.2	31.3	31.3	31.3	45.8	45.8	45.8	73.5
Maximum Refrigerant Pressure (psig)	445	445	445	445	445	445	445	445	445
Maximum Water Side Pressure without Pumps (psig)	300	300	300	300	300	300	300	300	300
Maximum Water Side Pressure with Pumps (psig)	150	150	150	150	150	150	150	150	150
COOLER WATER CONNECTIONS (in.)									
Inlet and Outlet, Victaulic	4	4	4	4	4	6	6	6	6
Drain (NPT)	3/4	3/4	3/4	3/4	3/4	3/4	3/4	3/4	3/4
CONDENSER FANS	Shrouded Axial Type, Vertical Discharge								
Standard Low Noise Type									
Fan Speed (rpm) Standard	1140	1140	1140	1140	1140	1140	1140	1140	1140
No. Blades...Diameter (in.)	9...30	9…30	9…30	9…30	9…30	9…30	9…30	9…30	9…30
No. Fans (Ckt A/Ckt B/Ckt C)	3/1/—	3/1/—	2/2/—	3/3/—	3/3/—	3/3/—	3/4/—	4/4/—	4/4/—
Total Airflow (cfm)	49,600	49,600	49,600	74,400	74,400	74,400	86,800	99,200	99,200
CONDENSER COILS									
No. Coils (Ckt A/Ckt B/Ckt C)	3/1/—	3/1/—	2/2/—	3/3/—	3/3/—	3/3/—	3/4/—	4/4/—	4/4/—
Total Face Area (sq ft)	94	94	94	141	141	141	164	188	188
Max Working Refrigerant Pressure (psig)	656	656	656	656	656	656	656	656	656
OPTIONAL HEAT RECOVERY CONDENSER	Flooded, Shell and Tube Type								
Weight (lb) (empty)	753	753	753	872	872	872	1236	1236	1236
Net Fluid Volume (gal)	8.0	8.0	8.0	10.0	10.0	10.0	15.1	15.1	15.1
Maximum Refrigerant Pressure (psig)	656	656	656	656	656	656	656	656	656
Maximum Water Side Pressure (psig)	300	300	300	300	300	300	300	300	300
Water Connections (in.)									
Inlet and Outlet, Victaulic	3	3	3	3	3	3	5	5	5
Drain (NPT)	3/8	3/8	3/8	3/8	3/8	3/8	3/8	3/8	3/8
HYDRONIC MODULE (Optional)	Pump(s) with pressure/temperature taps and combination valve.								
Pump	Single or Dual, 1800 or 3600 rpm								
CHASSIS DIMENSIONS (ft-in.)									
Length	7-11			11-10			15-9		
Width	7-4 25/32								
Height	7-6 7/16								

LEGEND

Al-Cu — Aluminum Fin/Copper Tube Condenser Coil
Cu-Cu — Copper Fin/Copper Tube Condenser Coil
EXV — Electronic Expansion Valve
MCHX — Microchannel Condenser Coil
N/A — Not Applicable

*Operating weight does not include any options.

NOTES:
1. 30RB chillers with Greenspeed® technology are not available in unit sizes 060 and 070.
2. No pumps are available for unit sizes 210-300.

Table 3A — Physical Data, 30RB060-300 — English (cont)

UNIT 30RB	160	170	190	210	225	250	275	300
OPERATING WEIGHT (lb)*								
Al-Cu Condenser Coil	10,266	10,601	12,013	13,734	14,067	15,468	16,915	18,306
Cu-Cu Condenser Coil	11,472	11,807	13,460	15,181	15,514	17,157	18,845	20,477
MCHX Condenser Coil	9,475	9,799	11,064	12,772	13,093	14,349	15,647	16,893
REFRIGERANT TYPE	R-410A, EXV Controlled System							
Refrigerant Charge (lb)								
Std Coil, Ckt A/Ckt B/Ckt C	162/125/—	162/133/—	162/162/—	125/125/125	125/125/125	125/125/162	162/162/125	162/162/162
MCHX Coil, Ckt A/Ckt B/Ckt C	79/63/—	79/64/—	79/87/—	59/53/64	59/59/64	59/59/89	83/87/68	83/87/94
COMPRESSORS	Scroll, Hermetic							
Quantity	7	7	8	9	9	10	11	12
Speed (rpm)	3500							
(Qty) Compressor Model Number Ckt A	(4) SH295	(4) SH295	(4) SH295	(3) SH295	(3) SH295	(3) SH295	(4) SH295	(4) SH295
(Qty) Compressor Model Number Ckt B	(3) SH240	(3) SH295	(4) SH295	(3) SH240	(3) SH295	(3) SH295	(4) SH295	(4) SH295
(Qty) Compressor Model Number Ckt C	N/A	N/A	N/A	(3) SH295	(3) SH295	(4) SH295	(3) SH295	(4) SH295
Oil Charge (Pt, Ckt A/Ckt B/Ckt C)	58.4/39.4/—	58.4/43.8/—	58.4/58.4/—	43.8/39.4/43.8	43.8/43.8/43.8	43.8/43.8/58.4	58.4/58.4/43.8	58.4/58.4/58.4
No. Capacity Steps								
Standard	7	7	8	9	9	10	11	12
Optional (Maximum)	8	8	9	10	10	11	12	13
Minimum Capacity Step (%)								
Standard	13	14	13	10	11	10	9	8
Optional	8	10	9	6	8	7	7	6
Capacity (%)								
Ckt A	62	57	50	36	33	30	36	33
Ckt B	38	43	50	28	33	30	36	33
Ckt C	N/A	N/A	N/A	36	33	40	28	33
COOLER	Direct Expansion, Shell and Tube Type							
Weight (empty, lb)	1518	1518	1518	2382	2382	2382	2382	2382
Net Fluid Volume (gal)	73.5	73.5	73.5	86.6	86.6	86.6	86.6	86.6
Maximum Refrigerant Pressure (psig)	445	445	445	445	445	445	445	445
Maximum Water Side Pressure without Pumps (psig)	300	300	300	300	300	300	300	300
Maximum Water Side Pressure with Pumps (psig)	150	150	150	150	150	150	150	150
COOLER WATER CONNECTIONS (in.)								
Inlet and Outlet, Victaulic	6	6	6	6	6	6	6	6
Drain (NPT)	3/4	3/4	3/4	3/4	3/4	3/4	3/4	3/4
CONDENSER FANS	Shrouded Axial Type, Vertical Discharge							
Standard Low Noise Type								
Fan Speed (rpm) Standard	1140	1140	1140	1140	1140	1140	1140	1140
No. Blades...Diameter (in.)	9…30	9…30	9…30	9…30	9…30	9…30	9…30	9…30
No. Fans (Ckt A/Ckt B/Ckt C)	6/4/—	6/4/—	6/6/—	4/4/4	4/4/4	4/4/6	6/6/4	6/6/6
Total Airflow (cfm)	124,000	124,000	148,800	148,800	148,800	173,600	198,400	223,200
CONDENSER COILS								
No. Coils (Ckt A/Ckt B/Ckt C)	6/4/—	6/4/—	6/6/—	4/4/4	4/4/4	4/4/6	6/6/4	6/6/6
Total Face Area (sq ft)	235	235	282	282	282	328	375	422
Max Working Refrigerant Pressure (psig)	656	656	656	656	656	656	656	656
OPTIONAL HEAT RECOVERY CONDENSER	Flooded, Shell and Tube Type							
Weight (lb) (empty)	1296	1296	1296	—	—	—	—	—
Net Fluid Volume (gal)	17.4	17.4	17.4	—	—	—	—	—
Maximum Refrigerant Pressure (psig)	656	656	656	—	—	—	—	—
Maximum Water Side Pressure (psig)	300	300	300	—	—	—	—	—
Water Connections (in.)								
Inlet and Outlet, Victaulic	5	5	5	—	—	—	—	—
Drain (NPT)	3/8	3/8	3/8	—	—	—	—	—
HYDRONIC MODULE (Optional)	Pump(s) with pressure/temperature taps and combination valve.							
Pump	Single or Dual, 1800 or 3600 rpm			Not available				
CHASSIS DIMENSIONS (ft-in.)								
Length	19-8			23-7		27-6	31-5	35-4
Width	7-4 25/32							
Height	7-6 7/16							

LEGEND

Al-Cu — Aluminum Fin/Copper Tube Condenser Coil
Cu-Cu — Copper Fin/Copper Tube Condenser Coil
EXV — Electronic Expansion Valve
MCHX — Microchannel Condenser Coil
N/A — Not Applicable

*Operating weight does not include any options.

NOTES:
1. 30RB chillers with Greenspeed® technology are not available in unit sizes 060 and 070.
2. No pumps are available for unit sizes 210-300.

Table 3B — Physical Data, 30RB060-300 — SI

UNIT 30RB	060	070	080	090	100	110	120	130	150
OPERATING WEIGHT (kg)*									
Al-Cu Condenser Coil	1869	1962	2091	2697	2798	2963	3488	3649	4161
Cu-Cu Condenser Coil	2088	2181	2310	3026	3127	3292	3871	4087	4599
MCHX Condenser Coil	1716	1804	1934	2472	2569	2734	3229	3358	3863
REFRIGERANT TYPE	R-410A, EXV Controlled System								
Refrigerant Charge (kg)									
Std Coil, Ckt A/Ckt B/Ckt C	40.6/18.4/—	50.8/18.4/—	31.1/31.1/—	43.5/34.5/—	43.5/43.5/—	43.5/48.1/—	43.5/60.3/—	60.3/48.1/—	60.3/60.3/—
MCHX Coil, Ckt A/Ckt B/Ckt C	18.1/9.1/—	18.1/9.1/—	15.0/15.0/—	18.1/18.1/—	18.1/19.1/—	18.1/23.1/—	19.5/25.9/—	24.5/19.5/—	25.4/28.1/—
COMPRESSORS	Scroll, Hermetic								
Quantity	3	3	4	4	4	5	5	6	6
Speed (r/s)	58.3								
(Qty) Compressor Model Number Ckt A	(2) SH240	(2) SH295	(2) SH240	(2) SH295	(2) SH295	(2) SH295	(2) SH295	(3) SH295	(3) SH295
(Qty) Compressor Model Number Ckt B	(1) SH240	(1) SH240	(2) SH240	(2) SH240	(2) SH295	(3) SH240	(3) SH295	(3) SH240	(3) SH295
(Qty) Compressor Model Number Ckt C	N/A	N/A	N/A	N/A	N/A	N/A	N/A	N/A	N/A
Oil Charge (L, Ckt A/Ckt B/Ckt C)	12.4/6.2/—	13.8/6.2/—	12.4/12.4/—	13.8/12.4/—	13.8/13.8/—	13.8/18.6/—	13.8/20.7/—	20.7/18.6/—	20.7/20.7/—
No. Capacity Steps									
Standard	3	3	4	4	4	5	5	6	6
Optional (Maximum)	4	4	5	5	5	6	6	7	7
Minimum Capacity Step (%)									
Standard	33	29	25	22	25	18	20	15	17
Optional	22	19	16	14	18	12	14	10	12
Capacity (%)									
Ckt A	67	71	50	56	50	45	40	56	50
Ckt B	33	29	50	44	50	55	60	44	50
Ckt C	N/A	N/A	N/A	N/A	N/A	N/A	N/A	N/A	N/A
COOLER	Direct Expansion, Shell and Tube Type								
Weight (empty, kg)	324	324	388	388	388	440	440	440	689
Net Fluid Volume (L)	106	106	118	118	118	173	173	173	278
Maximum Refrigerant Pressure (kPa)	3068	3068	3068	3068	3068	3068	3068	3068	3068
Maximum Water Side Pressure without Pumps (kPa)	2068	2068	2068	2068	2068	2068	2068	2068	2068
Maximum Water Side Pressure with Pumps (kPa)	1034	1034	1034	1034	1034	1034	1034	1034	1034
WATER CONNECTIONS (in.)									
Inlet and Outlet, Victaulic	4	4	4	4	4	6	6	6	6
Drain (NPT)	3/4	3/4	3/4	3/4	3/4	3/4	3/4	3/4	3/4
CONDENSER FANS	Shrouded Axial Type, Vertical Discharge								
Standard Low Noise Type									
Fan Speed (r/s) Standard	19	19	19	19	19	19	19	19	19
No. Blades...Diameter (mm)	9…762	9…762	9…762	9…762	9…762	9…762	9…762	9…762	9…762
No. Fans (Ckt A/Ckt B/Ckt C)	3/1/—	3/1/—	2/2/—	3/3/—	3/3/—	3/3/—	3/4/—	4/4/—	4/4/—
Total Airflow (L/s)	23 409	23 409	23 409	35 113	35 113	35 113	40 965	46 817	46 817
CONDENSER COILS									
No. Coils (Ckt A/Ckt B/Ckt C)	3/1/—	3/1/—	2/2/—	3/3/—	3/3/—	3/3/—	3/4/—	4/4/—	4/4/—
Total Face Area (sq m)	8.73	8.73	8.73	13.1	13.1	13.1	15.24	17.47	17.47
Max Working Refrigeration Pressure (kPa)	4522	4522	4522	4522	4522	4522	4522	4522	4522
OPTIONAL HEAT RECOVERY CONDENSER	Flooded, Shell and Tube Type								
Weight (kg) (empty)	342	342	342	396	396	396	562	562	562
Net Fluid Volume (L)	30.3	30.3	30.3	37.9	37.9	37.9	57.2	57.2	57.2
Maximum Refrigerant Pressure (kPa)	4523	4523	4523	4523	4523	4523	4523	4523	4523
Maximum Water Side Pressure (kPa)	2068	2068	2068	2068	2068	2068	2068	2068	2068
Water Connections (in.)									
Inlet and Outlet, Victaulic	3	3	3	3	3	3	5	5	5
Drain (NPT)	3/8	3/8	3/8	3/8	3/8	3/8	3/8	3/8	3/8
HYDRONIC MODULE (Optional)	Pump(s) with pressure/temperature taps and combination valve.								
Pump	Single or Dual, 29.2 or 58.3 r/s								
CHASSIS DIMENSIONS									
Length (mm)	2412			3606			4800		
Width (mm)	2255								
Height (mm)	2296.9								

LEGEND

Al-Cu — Aluminum Fin/Copper Tube Condenser Coil
Cu-Cu — Copper Fin/Copper Tube Condenser Coil
EXV — Electronic Expansion Valve
MCHX — Microchannel Condenser Coil
N/A — Not Applicable

*Operating weight does not include any options.

NOTES:
1. 30RB chillers with Greenspeed® technology are not available in unit sizes 060 and 070.
2. No pumps are available for unit sizes 210-300.

Table 3B — Physical Data, 30RB060-300 — SI (cont)

UNIT 30RB	160	170	190	210	225	250	275	300
OPERATING WEIGHT (kg)*								
Al-Cu Condenser Coil	4666	4819	5461	6243	6394	7031	7686	8321
Cu-Cu Condenser Coil	5215	5367	6118	6901	7052	7799	8566	9308
MCHX Condenser Coil	4297	4443	5019	5793	5937	6509	7096	7659
REFRIGERANT TYPE	R-410A, EXV Controlled System							
Refrigerant Charge (kg)								
Std Coil, Ckt A/Ckt B/Ckt C	73.5/56.7/—	73.5/60.3/—	73.5/73.5/—	56.7/56.7/56.7	56.7/56.7/56.7	56.7/56.7/73.5	73.5/73.5/56.7	73.5/73.5/73.5
MCHX Coil, Ckt A/Ckt B/Ckt C	35.8/28.6/—	35.8/29.0/—	35.8/39.5/—	26.8/24.0/29.0	26.8/26.8/29.0	26.8/26.8/40.4	37.6/39.5/30.8	37.6/39.5/42.6
COMPRESSORS	Scroll, Hermetic							
Quantity	7	7	8	9	9	10	11	12
Speed (r/s)	58.3							
(Qty) Compressor Model Number Ckt A	(4) SH295	(4) SH295	(4) SH295	(3) SH295	(3) SH295	(3) SH295	(4) SH295	(4) SH295
(Qty) Compressor Model Number Ckt B	(3) SH240	(3) SH295	(4) SH295	(3) SH240	(3) SH295	(3) SH295	(4) SH295	(4) SH295
(Qty) Compressor Model Number Ckt C	N/A	N/A	N/A	(3) SH295	(3) SH295	(4) SH295	(3) SH295	(4) SH295
Oil Charge (L, Ckt A/Ckt B/Ckt C)	27.6/18.6/—	27.6/20.7/—	27.6/27.6/—	20.7/18.6/20.7	20.7/20.7/20.7	20.7/20.7/27.6	27.6/27.6/20.7	27.6/27.6/27.6
No. Capacity Steps								
Standard	7	7	8	9	9	10	11	12
Optional (Maximum)	8	8	9	10	10	11	12	13
Minimum Capacity Step (%)								
Standard	13	14	13	10	11	10	9	8
Optional	8	10	9	6	8	7	7	6
Capacity (%)								
Ckt A	62	57	50	38	33	30	36	33
Ckt B	38	43	50	28	33	30	36	33
Ckt C	N/A	N/A	N/A	36	33	40	28	33
COOLER	Direct Expansion, Shell and Tube Type							
Weight (empty, kg)	689	689	689	1080	1080	1080	1080	1080
Net Fluid Volume (L)	278	278	278	327	327	327	327	327
Maximum Refrigerant Pressure (kPa)	3068	3068	3068	3068	3068	3068	3068	3068
Maximum Water Side Pressure without Pumps (kPa)	2068	2068	2068	2068	2068	2068	2068	2068
Maximum Water Side Pressure with Pumps (kPa)	1034	1034	1034	1034	1034	1034	1034	1034
WATER CONNECTIONS (in.)								
Inlet and Outlet, Victaulic	6	6	6	6	6	6	6	6
Drain (NPT)	3/4	3/4	3/4	3/4	3/4	3/4	3/4	3/4
CONDENSER FANS	Shrouded Axial Type, Vertical Discharge							
Standard Low Noise Type								
Fan Speed (r/s) Standard	19	19	19	19	19	19	19	19
No. Blades...Diameter (mm)	9…762	9…762	9…762	9…762	9…762	9…762	9…762	9…762
No. Fans (Ckt A/Ckt B/Ckt C)	6/4/—	6/4/—	6/6/—	4/4/4	4/4/4	4/4/6	6/6/4	6/6/6
Total Airflow (L/s)	58 521	58 521	70 226	70 226	70 226	81 930	93 634	105 339
CONDENSER COILS								
No. Coils (Ckt A/Ckt B/Ckt C)	6/4/—	6/4/—	6/6/—	4/4/4	4/4/4	4/4/6	6/6/4	6/6/6
Total Face Area (sq m)	21.83	21.83	26.2	26.2	26.2	30.47	34.84	39.21
Max Working Refrigeration Pressure (kPa)	4522	4522	4522	4522	4522	4522	4522	4522
OPTIONAL HEAT RECOVERY CONDENSER	Flooded, Shell and Tube Type							
Weight (kg) (empty)	589	589	589	—	—	—	—	—
Net Fluid Volume (L)	65.9	65.9	65.9	—	—	—	—	—
Maximum Refrigerant Pressure (kPa)	4523	4523	4523	—	—	—	—	—
Maximum Water Side Pressure (kPa)	2068	2068	2068	—	—	—	—	—
Water Connections (in.)								
Inlet and Outlet, Victaulic	5	5	5	—	—	—	—	—
Drain (NPT)	3/8	3/8	3/8	—	—	—	—	—
HYDRONIC MODULE (Optional)	Pump(s) with pressure/temperature taps and combination valve.			Not available				
Pump	Single or Dual, 29.2 or 58.3 r/s							
CHASSIS DIMENSIONS								
Length (mm)	5994	5994	7188	7188	7188	8382	9576	10 770
Width (mm)	2255							
Height (mm)	2296.9							

LEGEND

Al-Cu — Aluminum Fin/Copper Tube Condenser Coil
Cu-Cu — Copper Fin/Copper Tube Condenser Coil
EXV — Electronic Expansion Valve
MCHX — Microchannel Condenser Coil
N/A — Not Applicable

*Operating weight does not include any options.

NOTES:
1. 30RB chillers with Greenspeed® technology are not available in unit sizes 060 and 070.
2. No pumps are available for unit sizes 210-300.

Table 4A — Physical Data — 30RB315-390 — English

UNIT 30RB	315	330	345	360	390
OPERATING WEIGHT (Module A/Module B, lb)*					
Al-Cu Condenser Coil	10,266/10,266	10,601/10,266	10,601/10,601	12,013/10,601	12,013/12,013
Cu-Cu Condenser Coil	11,472/11,472	11,807/11,472	11,807/11,807	13,460/11,807	13,460/13,460
MCHX Condenser Coil	9,475/9,475	9,799/9,475	9,799/9,799	11,064/9,799	11,064/11,064
REFRIGERANT TYPE	R-410A, EXV Controlled System				
Circuits Qty	4	4	4	4	4
Refrigerant Charge					
Std Coil, Module A Ckt A/Ckt B (lb)	162/106	162/133	162/133	162/162	162/162
Std Coil, Module B Ckt A/Ckt B (lb)	162/106	162/106	162/133	162/133	162/162
MCHX Coil, Module A Ckt A/Ckt B (lb)	83/55	83/64	83/64	83/87	83/87
MCHX Coil, Module B Ckt A/Ckt B (lb)	83/55	83/55	83/64	83/64	83/87
COMPRESSORS	Scroll, Hermetic				
Total Quantity	14	14	14	15	16
Speed (rpm)	3500				
Module A, (Qty) Compressor Model Number Ckt A	(4) SH295	(4) SH295	(4) SH295	(4) SH295	(4) SH295
Module A, (Qty) Compressor Model Number Ckt B	(3) SH240	(3) SH295	(3) SH295	(4) SH295	(4) SH295
Module B, (Qty) Compressor Model Number Ckt A	(4) SH295	(4) SH295	(4) SH295	(4) SH295	(4) SH295
Module B, (Qty) Compressor Model Number Ckt B	(3) SH240	(3) SH240	(3) SH295	(3) SH295	(4) SH295
Module A Oil Charge (Pt, Ckt A/Ckt B)	52.5/39.4	52.5/39.4	52.5/39.4	52.5/52.5	52.5/52.5
Module B Oil Charge (Pt, Ckt A/Ckt B)	52.5/39.4	52.5/39.4	52.5/39.4	52.5/39.4	52.5/52.5
No. Capacity Steps					
Standard	14	14	14	15	16
Optional (Maximum)	16	16	16	17	18
Minimum Capacity Step (%)					
Standard	6	6	7	7	6
Optional	5	4	6	5	5
Capacity (%)					
Module A, Ckt A	31	30	29	27	25
Module A, Ckt B	19	22	21	27	25
Module B, Ckt A	31	30	29	27	25
Module B, Ckt B	19	18	21	20	25
COOLER	Direct Expansion, Shell and Tube Type				
Module A Weight (empty, lb)	1518	1518	1518	1518	1518
Module B Weight (empty, lb)	1518	1518	1518	1518	1518
Net Fluid Volume (gal) Module A/Module B	73.5/73.5	73.5/73.5	73.5/73.5	73.5/73.5	73.5/73.5
Maximum Refrigerant Pressure (psig)	445	445	445	445	445
Maximum Water Side Pressure (psig)	300	300	300	300	300
WATER CONNECTIONS (in.)					
Inlet and Outlet, Victaulic	6	6	6	6	6
Drain (NPT)	3/4	3/4	3/4	3/4	3/4
CONDENSER FANS	Shrouded Axial Type, Vertical Discharge				
Standard Low Noise Type					
Fan Speed (rpm) Standard	1140	1140	1140	1140	1140
Module A No. Blades...Diameter (in.) Ckt A/Ckt B	9...30/9...30	9...30/9...30	9...30/9...30	9...30/9...30	9...30/9...30
Module B No. Blades...Diameter (in.) Ckt A/Ckt B	9...30/9...30	9...30/9...30	9...30/9...30	9...30/9...30	9...30/9...30
Total No. Fans	20	20	20	22	24
Module A No. Fans (Ckt A/Ckt B)	6/4	6/4	6/4	6/6	6/6
Module B No. Fans (Ckt A/Ckt B)	6/4	6/4	6/4	6/4	6/6
Total Airflow (cfm)	248,000	248,000	248,000	272,800	297,600
CONDENSER COILS					
Module A No. Coils (Ckt A/Ckt B)	6/4	6/4	6/4	6/6	6/6
Module B No. Coils (Ckt A/Ckt B)	6/4	6/4	6/4	6/4	6/6
Total Face Area (sq ft)	470	470	470	517	564
Max Working Refrigerant Pressure (psig)	656	656	656	656	656

LEGEND

Al-Cu — Aluminum Fin/Copper Tube Condenser Coil
Cu-Cu — Copper Fin/Copper Tube Condenser Coil
EXV — Electronic Expansion Valve
MCHX — Microchannel Condenser Coil

*No pumps are available for models 30RB315-390.

Table 4B — Physical Data — 30RB315-390 — SI

UNIT 30RB	315	330	345	360	390
OPERATING WEIGHT (Module A/Module B, kg)*					
Al-Cu Condenser Coil	4656/4656	4808/4656	4808/4808	5448/4808	5448/5448
Cu-Cu Condenser Coil	5203/5203	5354/5203	5354/5354	6104/5354	6104/6104
MCHX Condenser Coil	4297/4297	4444/4297	4444/4444	5018/4444	5018/5018
REFRIGERANT TYPE	R-410A, EXV Controlled System				
Circuits Qty	4	4	4	4	4
Refrigerant Charge					
Std Coil, Module A Ckt A/Ckt B (kg)	73.5/48.1	73.5/60.3	73.5/60.3	73.5/73.5	73.5/73.5
Std Coil, Module B Ckt A/Ckt B (kg)	73.5/48.1	73.5/48.1	73.5/60.3	73.5/60.3	73.5/73.5
MCHX Coil, Module A Ckt A/Ckt B (kg)	37.6/24.9	37.6/29.0	37.6/29.0	37.6/39.5	37.6/39.5
MCHX Coil, Module B Ckt A/Ckt B (kg)	37.6/24.9	37.6/24.9	37.6/29.0	37.6/29.0	37.6/39.5
COMPRESSORS	Scroll, Hermetic				
Total Quantity	14	14	14	15	16
Speed (r/s)			58.3		
Module A, (Qty) Compressor Model Number Ckt A	(4) SH295	(4) SH295	(4) SH295	(4) SH295	(4) SH295
Module A, (Qty) Compressor Model Number Ckt B	(3) SH240	(3) SH295	(3) SH295	(4) SH295	(4) SH295
Module B, (Qty) Compressor Model Number Ckt A	(4) SH295	(4) SH295	(4) SH295	(4) SH295	(4) SH295
Module B, (Qty) Compressor Model Number Ckt B	(3) SH240	(3) SH240	(3) SH295	(3) SH295	(4) SH295
Module A Oil Charge (L, Ckt A/Ckt B)	24.8/18.6	24.8/18.6	24.8/18.6	24.8/24.8	24.8/24.8
Module B Oil Charge (L, Ckt A/Ckt B)	24.8/18.6	24.8/18.6	24.8/18.6	24.8/18.6	24.8/24.8
No. Capacity Steps					
Standard	14	14	14	15	16
Optional (Maximum)	16	16	16	17	18
Minimum Capacity Step (%)					
Standard	6	6	7	7	6
Optional	5	4	6	5	5
Capacity (%)					
Module A, Ckt A	31	30	29	27	25
Module A, Ckt B	19	22	21	27	25
Module B, Ckt A	31	30	29	27	25
Module B, Ckt B	19	18	21	20	25
COOLER	Direct Expansion, Shell and Tube Type				
Module A Weight (empty, kg)	689	689	689	689	689
Module B Weight (empty, kg)	689	689	689	689	689
Net Fluid Volume (L) Module A/Module B	278/278	278/278	278/278	278/278	278/278
Maximum Refrigerant Pressure (kPa)	3068	3068	3068	3068	3068
Maximum Water Side Pressure (kPa)	2068	2068	2068	2068	2068
WATER CONNECTIONS (in.)					
Inlet and Outlet, Victaulic	6	6	6	6	6
Drain (NPT)	3/4	3/4	3/4	3/4	3/4
CONDENSER FANS	Shrouded Axial Type, Vertical Discharge				
Standard Low Noise Type					
Fan Speed (r/s) Standard	19	19	19	19	19
Module A No. Blades...Diameter (mm) Ckt A/Ckt B	9...762/9...762	9...762/9...762	9...762/9...762	9...762/9...762	9...762/9...762
Module B No. Blades...Diameter (mm) Ckt A/Ckt B	9...762/9...762	9...762/9...762	9...762/9...762	9...762/9...762	9...762/9...762
Total No. Fans	20	20	20	22	24
Module A No. Fans (Ckt A/Ckt B)	6/4	6/4	6/4	6/6	6/6
Module B No. Fans (Ckt A/Ckt B)	6/4	6/4	6/4	6/4	6/6
Total Airflow (L/s)	117 042	117 042	117 042	128 747	140 452
CONDENSER COILS					
Module A No. Coils (Ckt A/Ckt B)	6/4	6/4	6/4	6/6	6/6
Module B No. Coils (Ckt A/Ckt B)	6/4	6/4	6/4	6/4	6/6
Total Face Area (sq m)	43.66	43.66	43.66	48.03	52.4
Max Working Refrigerant Pressure (kPa)	4522	4522	4522	4522	4522

LEGEND

Al-Cu — Aluminum Fin/Copper Tube Condenser Coil
Cu-Cu — Copper Fin/Copper Tube Condenser Coil
EXV — Electronic Expansion Valve
MCHX — Microchannel Condenser Coil

*No pumps are available for models 30RB315-390.

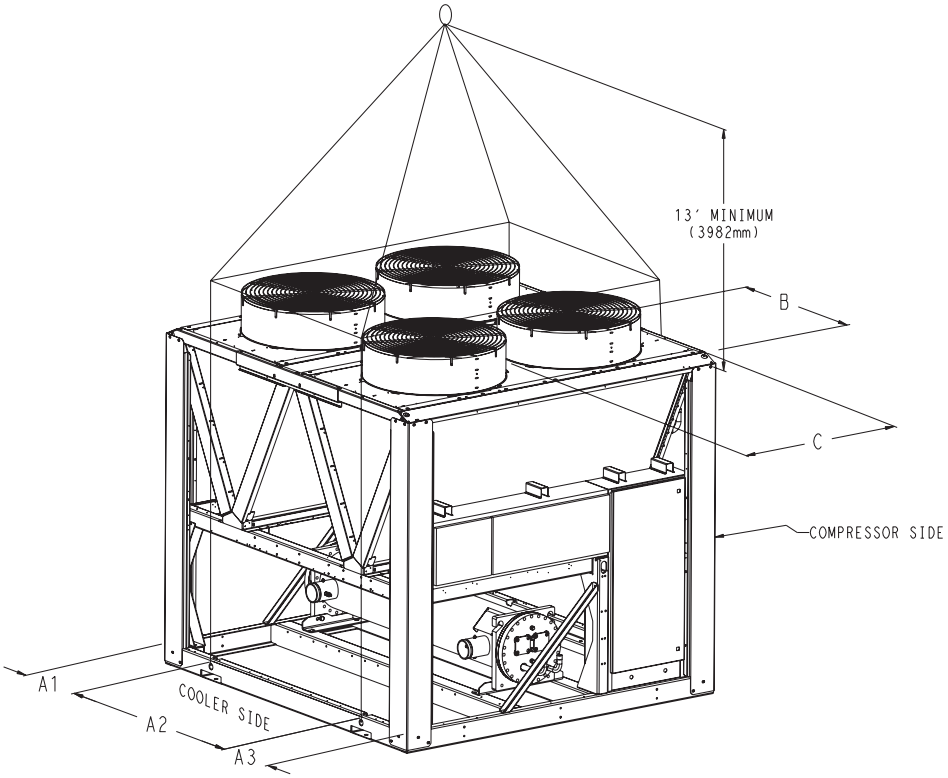

CAUTION- NOTICE TO RIGGERS:

ALL PANELS MUST BE IN PLACE WHEN RIGGING. DO NOT ATTEMPT TO FORK THESE UNITS IF NO SKID IS SUPPLIED.

NOTES:
1. 1.50 DIA. (38.1mm) LIFTING HOLES PROVIDED FOR FIELD SUPPLIED CLEVIS.
2. RIG WITH A MINIMUM OF 25FT (7620MM) LENGTH CHAINS OR CABLES.
3. IF CENTRAL LIFTING POINT IS USED, IT MUST BE A MINIMUM OF 13 FT. (3962mm) ABOVE THE TOP OF THE UNIT.
4. SPREADER BARS MADE FROM STEEL OR DOUBLE NAILED, AND NOTCHED 2X6´s APPROXIMATELY 8FT. (2438mm) LONG, MUST BE PLACED JUST ABOVE THE TOP OF THE UNIT (AND STACKS) TO REDUCE THE RISK OF DAMAGE TO THE TOP OF THE UNIT AND COILS.
5. IF OVERHEAD RIGGING IS NOT AVAILABLE, THE UNIT CAN BE MOVED ON ROLLERS OR DRAGGED. WHEN UNIT IS MOVED ON ROLLERS, THE UNIT SKID, IF EQUIPPED, MUST BE REMOVED. TO LIFT THE UNIT, USE JACKS AT THE RIGGING POINTS. USE A MINIMUM OF ONE ROLLER EVERY 6FT. (1829mm) TO DISTRIBUTE THE LOAD. IF THE UNIT IS TO BE DRAGGED, LIFT THE UNIT AS DESCRIBED ABOVE, AND PLACE UNIT ON A PAD. APPLY MOVING FORCE TO THE PAD, NOT THE UNIT. WHEN IN ITS FINAL LOCATION, RAISE THE UNIT AND REMOVE THE PAD.
6. CHECK BILL OF LADING FOR SHIPPING WEIGHT OF UNIT.

MODEL NUMBER	MAX. SHIPPING WT. W/O PACKAGING		MAX. SHIPPING WT. WITH PACKAGING		LIFTING HOLES						CENTER OF GRAVITY			
					"A1"		"A2"		"A3"		"B"		"C"	
	LB	KG	LB	KG	IN.	MM	IN.	MM	IN.	MM	IN.	MM	IN.	MM
30RBA060	4705	2134	5685	2579	18.0	456.6	58.3	1479.8	18.0	456.6	45.8	1164.3	40.9	1037.9
30RBA060-CU	5187	2353	6167	2797	18.0	456.6	58.3	1479.8	18.0	456.6	45.8	1164.3	40.9	1037.9
30RBA070	4911	2228	5891	2672	18.0	456.6	58.3	1479.8	18.0	456.6	45.9	1164.8	39.9	1012.7
30RBA070-CU	5393	2446	6373	2891	18.0	456.6	58.3	1479.8	18.0	456.6	45.9	1164.8	39.9	1012.7
30RBA080	5258	2385	6238	2830	18.0	456.6	58.3	1479.8	18.0	456.6	47.5	1205.7	39.8	1012.2
30RBA080-CU	5740	2604	6720	3048	18.0	456.6	58.3	1479.8	18.0	456.6	47.5	1205.7	39.8	1012.2
30RBA090	6590	2989	7660	3475	16.1	408.9	109.0	2769.3	16.1	408.9	64.0	1624.8	40.1	1017.4
30RBA090-CU	7314	3318	8384	3803	16.1	408.9	109.0	2769.3	16.1	408.9	64.0	1624.8	40.1	1017.4
30RBA100	6813	3090	7883	3576	16.1	408.9	109.0	2769.3	16.1	408.9	63.5	1614.0	39.3	998.5
30RBA100-CU	7537	3419	8607	3904	16.1	408.9	109.0	2769.3	16.1	408.9	63.5	1614.0	39.3	998.5
30RBA110	7067	3206	8137	3691	16.1	408.9	109.0	2769.3	16.1	408.9	67.4	1713.0	39.3	997.1
30RBA110-CU	7791	3534	8861	4019	16.1	408.9	109.0	2769.3	16.1	408.9	67.4	1713.0	39.3	997.1
30RBA120	8238	3737	9398	4263	16.1	408.9	156.0	3963.3	16.1	408.9	92.3	2345.5	39.1	992.7
30RBA120-CU	9082	4120	10242	4646	16.1	408.9	156.0	3963.3	16.1	408.9	92.3	2345.5	39.1	992.7
30RBA130	8593	3898	9753	4424	16.1	408.9	156.0	3963.3	16.1	408.9	89.5	2272.4	38.7	983.2
30RBA130-CU	9558	4336	10718	4862	16.1	408.9	156.0	3963.3	16.1	408.9	89.5	2272.4	38.7	983.2
30RBA150	9808	4449	10968	4975	16.1	408.9	156.0	3963.3	16.1	408.9	94.2	2392.2	38.7	982.8
30RBA150-CU	10773	4887	11933	5413	16.1	408.9	156.0	3963.3	16.1	408.9	94.2	2392.2	38.7	982.8

DEDUCT THESE VALUES FOR UNITS WITH NO PUMP OPTIONS

	SINGLE PUMP DEDUCT (LB)	NO PUMP DEDUCT (LB)		SINGLE PUMP DEDUCT (LB)	NO PUMP DEDUCT (LB)
30RBA060,070	318	833	30RBA110-130	383	923
30RBA080-100	423	923	30RBA150	592	1245

CU = COPPER FINNED COILS

00PSN500037300A

Fig. 24 — Unit Rigging Label Detail 30RB060-150

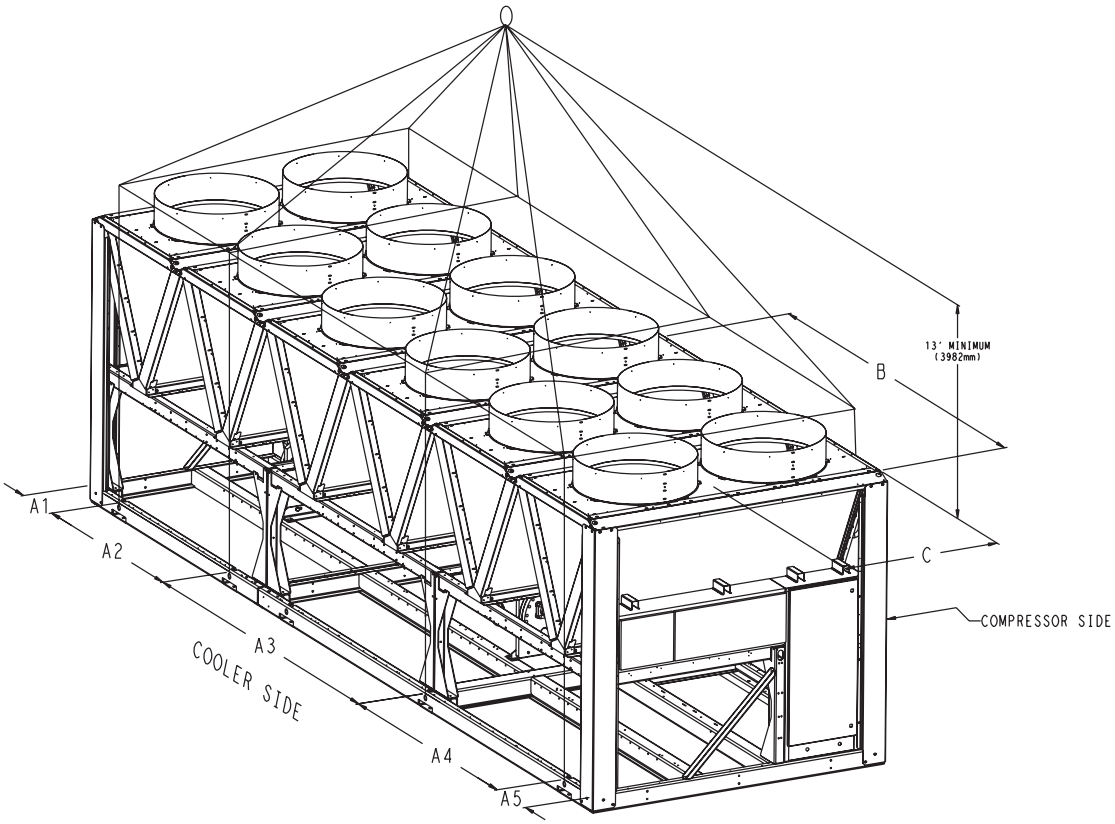

CAUTION- NOTICE TO RIGGERS:

ALL PANELS MUST BE IN PLACE WHEN RIGGING. DO NOT ATTEMPT TO FORK THESE UNITS IF NO SKID IS SUPPLIED.

NOTES:
1. 1.50 DIA. (38.1mm) LIFTING HOLES PROVIDED FOR FIELD SUPPLIED CLEVIS.
2. RIG WITH A MINIMUM OF 25FT (7620MM) LENGTH CHAINS OR CABLES.
3. IF CENTRAL LIFTING POINT IS USED, IT MUST BE A MINIMUM OF 13 FT. (3962mm) ABOVE THE TOP OF THE UNIT.
4. SPREADER BARS MADE FROM STEEL OR DOUBLE NAILED, AND NOTCHED 2X6's APPROXIMATELY 8FT. (2438mm) LONG, MUST BE PLACED JUST ABOVE THE TOP OF THE UNIT (AND STACKS) TO REDUCE THE RISK OF DAMAGE TO THE TOP OF THE UNIT AND COILS.
5. IF OVERHEAD RIGGING IS NOT AVAILABLE, THE UNIT CAN BE MOVED ON ROLLERS OR DRAGGED. WHEN UNIT IS MOVED ON ROLLERS, THE UNIT SKID, IF EQUIPPED, MUST BE REMOVED. TO LIFT THE UNIT, USE JACKS AT THE RIGGING POINTS. USE A MINIMUM OF ONE ROLLER EVERY 6FT. (1829mm) TO DISTRIBUTE THE LOAD. IF THE UNIT IS TO BE DRAGGED, LIFT THE UNIT AS DESCRIBED ABOVE, AND PLACE UNIT ON A PAD. APPLY MOVING FORCE TO THE PAD, NOT THE UNIT. WHEN IN ITS FINAL LOCATION, RAISE THE UNIT AND REMOVE THE PAD.
6. CHECK BILL OF LADING FOR SHIPPING WEIGHT OF UNIT.

MODEL NUMBER	MAX. SHIPPING WT. W/O PACKAGING		MAX. SHIPPING WT. WITH PACKAGING		LIFTING HOLES										CENTER OF GRAVITY			
					"A1"		"A2"		"A3"		"A4"		"A5"		"B"		"C"	
	LB	KG	LB	KG	IN.	MM	IN.	MM	IN.	MM	IN.	MM	IN.	MM	IN.	MM	IN.	MM
30RBA160	10900	4944	12150	5511	16.1	408.9	94.0	2388.0	109.0	2769.3	16.1	408.9	N/A	N/A	120.7	3064.9	39.1	994.4
30RBA160-CU	12106	5491	13356	6058	16.1	408.9	94.0	2388.0	109.0	2769.3	16.1	408.9	N/A	N/A	120.7	3064.9	39.1	994.4
30RBA170	11235	5096	12485	5663	16.1	408.9	94.0	2388.0	109.0	2769.3	16.1	408.9	N/A	N/A	122.6	3113.6	38.5	978.1
30RBA170-CU	12441	5643	13691	6210	16.1	408.9	94.0	2388.0	109.0	2769.3	16.1	408.9	N/A	N/A	122.6	3113.6	38.5	978.1
30RBA190	12647	5737	13987	6345	16.1	408.9	109.0	2769.3	32.0	812.7	109.3	2769.3	16.1	408.9	140.9	3578.3	38.4	974.3
30RBA190-CU	14094	6393	15434	7001	16.1	408.9	109.0	2769.3	32.0	812.7	109.3	2769.3	16.1	408.9	140.9	3578.3	38.4	974.3
30RBA210	13018	5905	14358	6513	16.1	408.9	62.0	1575.3	110.0	2794.4	78.0	1981.7	16.1	408.9	138.9	3527.6	36.1	917.5
30RBA210-CU	14465	6561	15805	7169	16.1	408.9	62.0	1575.3	110.0	2794.4	78.0	1981.7	16.1	408.9	138.9	3527.6	36.1	917.5
30RBA225	13351	6056	14691	6664	16.1	408.9	62.0	1575.3	110.0	2794.4	78.0	1981.7	16.1	408.9	141.3	3588.4	35.7	906.4
30RBA225-CU	14798	6712	16138	7320	16.1	408.9	62.0	1575.3	110.0	2794.4	78.0	1981.7	16.1	408.9	141.3	3588.4	35.7	906.4
30RBA250	14752	6691	16182	7340	16.1	408.9	109.0	2769.3	110.0	2794.4	78.0	1981.7	16.1	408.9	158.3	4021.7	35.8	910.1
30RBA250-CU	16441	7457	17871	8106	16.1	408.9	109.0	2769.3	110.0	2794.4	78.0	1981.7	16.1	408.9	158.3	4021.7	35.8	910.1
30RBA275	16199	7348	17719	8037	16.1	408.9	62.0	1575.3	141.0	3582.0	141.0	3582.0	16.1	408.9	191.2	4856.9	36.0	913.8
30RBA275-CU	18129	8223	19649	8913	16.1	408.9	62.0	1575.3	141.0	3582.0	141.0	3582.0	16.1	408.9	191.2	4856.9	36.0	913.8
30RBA300	17590	7979	19200	8709	16.1	408.9	109.0	2769.3	141.0	3582.0	141.0	3582.0	16.1	408.9	209.3	5316.8	36.0	915.6
30RBA300-CU	19761	8964	21371	9694	16.1	408.9	109.0	2769.3	141.0	3582.0	141.0	3582.0	16.1	408.9	209.3	5316.8	36.0	915.6
DEDUCT THESE VALUES FOR UNITS WITH NO PUMP OPTIONS																		
	SINGLE PUMP DEDUCT (LB)		NO PUMP DEDUCT (LB)															
30RBA160-190	592		1245															
CU = COPPER FINNED COILS																		00PSN500037400A

Fig. 25 — Unit Rigging Label Detail 30RB160-300

Step 2 — Remove Compressor Rack Holddown Bolts — The 30RB units are shipped with holddown bolts securing the compressor rail assembly to the unit base frame. These bolts are red and are located between the compressors in the front and rear of the compressor rail assembly. These bolts and holddown assemblies must be removed for the vibration isolation system to operate properly. Using a 15mm socket, loosen and remove the bolt and collar assembly as shown in Fig. 26.

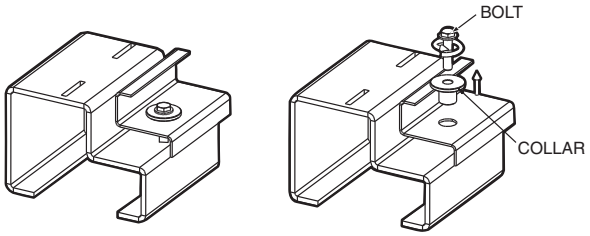

Fig. 26 — Compressor Rack Holddown Bolts

See Table 5 for the number of holddown assemblies for each unit.

Isolation mounts for the compressor rail assembly are located directly in front of and behind each compressor. Do not loosen or remove the isolation mounts, only the shipping bolts. There are 4 bolts that hold down each compressor. Do not loosen these bolts.

Table 5 — Number of Holddown Assemblies

UNIT 30RB	CIRCUIT A + B	CIRCUIT A	CIRCUIT B	CIRCUIT C
060-070	4	—	—	—
080-100	4	—	—	—
110-120	—	2	4	—
130-190	—	4	4	—
210-300	—	4	4	4

MODULAR UNIT 30RB	CIRCUIT A		CIRCUIT B	
	Module A	Module B	Module A	Module B
315	4	4	4	4
330	4	4	4	4
345	4	4	4	4
360	4	4	4	4
390	4	4	4	4

Step 3 — Remove Compressor Shipping Braces — Each unit is equipped with compressor shipping braces tying each compressor on the circuit together. Prior to start-up these braces must be removed. Using a 15mm socket, loosen each bolt and nut on each compressor tab and remove all braces before unit start-up. Remove the compressor shipping braces attached between the compressors; see Fig. 27 for guidance.

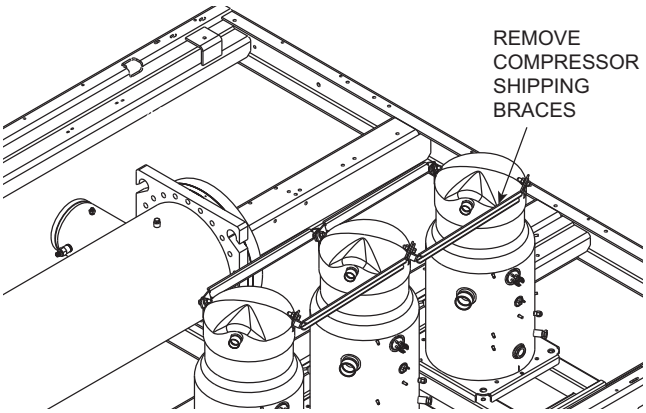

Fig. 27 — Compressor Shipping Braces Removal

FOR UNITS EQUIPPED WITH COMPRESSOR SOUND BLANKETS — The sound blanket top covers are shipped inside the control box(es) for the unit. Remove the top covers from the control boxes and install prior to start-up. Align the discharge tube with the cutout on the top cover; see Fig. 28. Firmly press the Velcro sections together, ensuring the top cover is held tightly against the blanket.

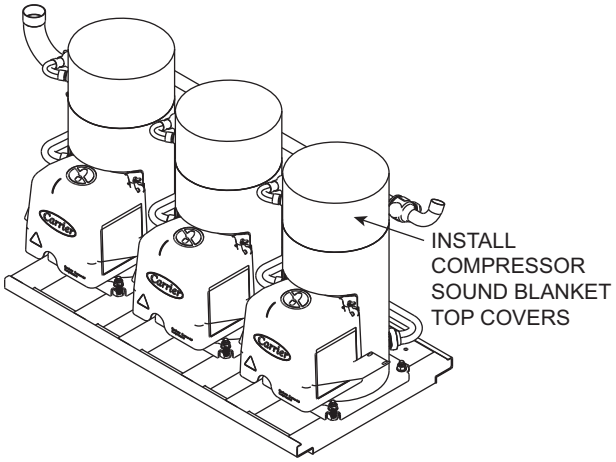

Fig. 28 — Compressor Sound Blanket Top Covers

Step 4 — Make Cooler Fluid, Heat Reclaim and Drain Piping Connections — To facilitate servicing, it is recommended additional field-supplied air vents be installed. Locate air vents at the highest possible point of the chilled water and heat reclaim systems. In addition to field-supplied air vents, facilitate servicing in addition to flow balancing by installing field-supplied shut-off valves, thermometers, clean-out tees, pressure and temperature taps in the inlet and outlet piping. Locate valves in return and supply cooler water and heat reclaim lines as close to the chiller as possible.

In sound sensitive applications, consider the installation of piping vibration isolators. Drain connections are provided in the cooler. Refer to the dimensional drawings, Fig. 2-20 for locations. Insulate the drain piping (in the same manner as the chilled water piping) for at least 12-in. (305 mm) from the cooler.

FREEZE PROTECTION — Upon completion of the field piping installation, freeze protection must be considered. Freeze protection for the cooler is available from the factory with a freeze protection option for the unit. Freeze protection for the pump (hydronic) package is standard on all units with the optional hydronic package (30RB060-190 units). External piping freeze protection also must be considered. Since power is sometimes lost for extended periods during winter storms, freeze protection provided by heater tapes will be effective only if a back-up power supply can be assured for the unit's control circuit, heater and cooler pump. If not protected with an antifreeze solution, draining the cooler and outdoor piping is recommended if the system will not be used during freezing weather conditions.

NOTE: See Freeze Protection section on page 54 for a more detailed overview of freeze protection.

> IMPORTANT: Glycol anti-freeze solutions are highly recommended since heater tapes provide no protection in the event of a power failure.

UNITS WITH HYDRONIC PUMP PACKAGE — The 30RB060-190 units can be equipped with a factory-installed hydronic pump package consisting of a suction guide/strainer, pump, combination valve, internal piping and wiring connected at the factory.

The combination valve performs the following functions:

- Drip-tight shut-off valve
- Spring closure design with a non-slam check valve
- Flow-throttling valve

Refer to Fig. 2-20 for cooler connection locations. The inlet is connected to the suction guide/strainer of the pump via a Victaulic-type connection. The cooler supply has water-side Victaulic-type connections (follow connection directions as provided by the coupling manufacturer). Provide proper support for the piping. If compressor and cooler grilles have been added, holes must be cut in the grilles for field piping and insulation.

The suction guide/strainer is shipped from the factory with a run-in screen. This screen is a temporary device used during the start-up/clean-up process of the chilled water circuit to prevent construction debris from damaging the pump or internal tubes of cooler. After all debris has been removed or a maximum of 24 running hours the temporary screen must be removed. See the Controls, Start-Up, Operation, Service and Troubleshooting guide for further information.

⚠ CAUTION

The suction guide/strainer is shipped from the factory with a run-in screen. This temporary screen must be removed after all debris has been removed or a maximum of 24 running hours. Failure to remove the temporary screen may result in damage to the pump or cooler.

NOTE: Units with factory-installed hydronic pump packages applied on open loop systems require that an additional field-supplied strainer with a minimum size of 20 mesh be installed within 10 ft (3.05 m) of and ahead of the cooler inlet to prevent debris from damaging internal tubes of the cooler.

⚠ CAUTION

Do not circulate water through unit without strainers in place. Failure to use the strainers represents abuse and may impair or otherwise negatively affect the Carrier product warranty.

A $^3/_4$ in. NPT fitting is installed in the inlet piping of the pump for connection to an expansion tank. Install the tank in accordance with the manufacturer's instructions.

Figures 29 and 30 illustrate typical single and dual pump packages.

Two drain connections are provided and are located at pump volute, and the suction guide. See Fig. 2-20 for connection location.

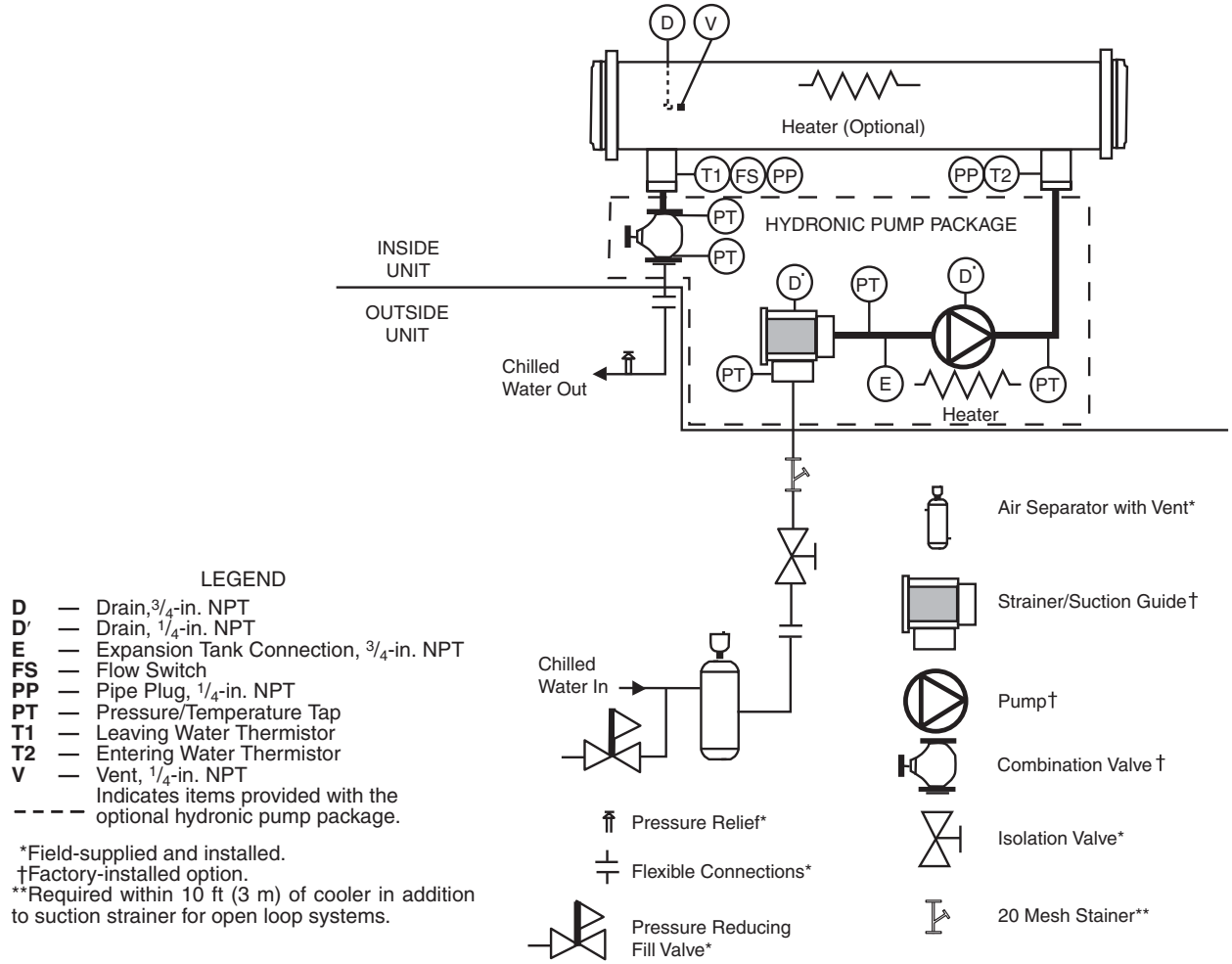

Fig. 29 — Typical Piping Diagram on 30RB Units with Hydronic Package — Single Pump

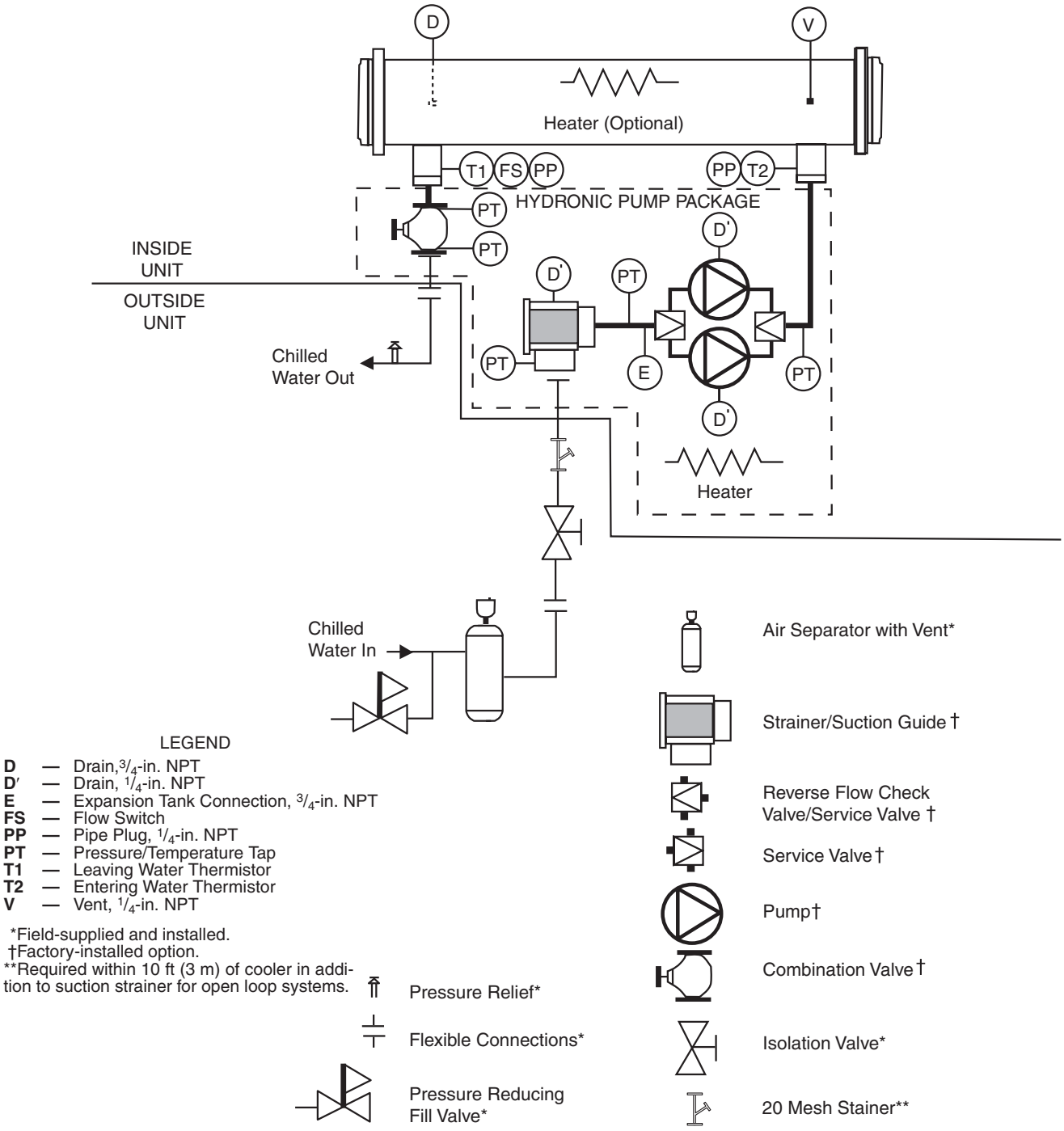

Fig. 30 — Typical Piping Diagram on 30RB Units with Hydronic Package — Dual Pumps

UNITS WITHOUT HYDRONIC PUMP PACKAGE — Refer to Fig. 2-20 for cooler connection locations. It is required that a field-supplied strainer with a minimum size of 20 mesh be installed within 10 ft (3.05 m) of and ahead of the cooler inlet to prevent debris from damaging internal tubes of the cooler.

⚠ CAUTION

Do not circulate water through unit without strainers in place. Failure to use the strainers represents abuse and may impair or otherwise negatively affect the Carrier product warranty.

The cooler has water-side victaulic-type connections (follow connection directions as provided by the coupling manufacturer). Provide proper support for the piping. If compressor and cooler grilles have been added, holes must be cut in the grilles for field piping and insulation. See Fig. 31 for a typical piping diagram of a 30RB unit without a hydronic pump package.

A drain connection is located at the leaving water (supply) end of cooler. See Fig. 2-20 for connection location. Insulate the drain piping (in the same manner as the chilled water piping) for at least 12 in. (305 mm) from the unit.

UNITS WITH OPTIONAL HEAT RECLAIM — The 30RB060-190 units can be equipped with a factory-installed heat reclaim package consisting of a shell and tube condenser,

condenser flow switch, temperature sensors and refrigeration devices to allow up to 100% of the condenser heat to be reclaimed for hot water. This means that this water-cooled condenser, which is in parallel with the standard air-cooled condenser, is capable of capturing all of the heat available from the chiller condensing process. The leaving water temperature can reach at maximum 131 F (55 C) under steady state and constant hot water flow conditions with an allowable hot water temperature range of 68 to 131 F (20 to 55 C). The heat reclaim condenser fluid connections are at the end of the unit opposite the control panel. The temperature sensor and the condenser flow switch are mounted in the nozzles and are wired in the control box. Refer to the Controls and Troubleshooting Book for detailed operational information.

The heat reclaim condenser has water-side Victaulic-type connections (follow connection directions as provided by the coupling manufacturer). Provide proper support for the piping. If compressor and cooler grilles have been added, holes must be cut for field piping and insulation. A field-supplied strainer with a minimum size of 20 mesh must be installed within 10 ft (3.0 m) of the inlet to the heat reclaim condenser. See Fig. 32 for a typical piping diagram of the heat reclaim condenser and 3-way valve location. All piping must follow standard piping techniques. Refer to Carrier System Design Manual or appropriate ASHRAE (American Society of Heating, Refrigerating, and Air-Conditioning Engineers) handbook for details.

⚠ CAUTION

Do not circulate water through unit without strainers in place. Failure to use the strainers represents abuse and may impair or otherwise negatively affect the Carrier product warranty.

Two drain connections are provided, one in each head of the condenser.

HEAD PRESSURE CONTROL — A form of head pressure control is required while in the heat reclaim mode. In order to meet this requirement, a properly sized 3-way valve must be field-installed. This valve will facilitate cold water start-up (water temperatures below 68 F [20 C]), and it also will be able to maintain proper head pressure during heat reclaim operation. Since the hot water temperature at start-up may be very low, the 3-way valve is to be located as close to the heating condenser as possible so that this valve can quickly accomplish its purpose of maintaining the minimum required head pressure. Locate the 3-way valve within 40 ft (12.2 m) of the heating condenser if the circulating pump is located between the 3-way valve and the heat reclaim condenser. See Fig. 33A. If the pumps are too far away from the condenser, a second option is to install the 3-way control valve close to the condenser. See Fig. 33B. The 30RB unit uses an anolog output to control this valve.

LEGEND

D — Drain, $^3/_4$-in. NPT
FS — Flow Switch
PP — Pipe Plug, $^1/_4$-in. NPT
T1 — Leaving Water Thermistor
T2 — Entering Water Thermistor
V — Vent, $^1/_4$-in. NPT

*Field-supplied and installed.

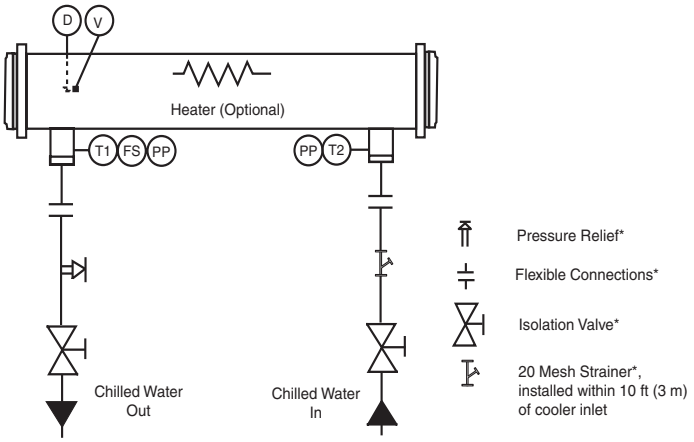

Fig. 31 — Typical Piping Diagram on 30RB Units without Hydronic Package

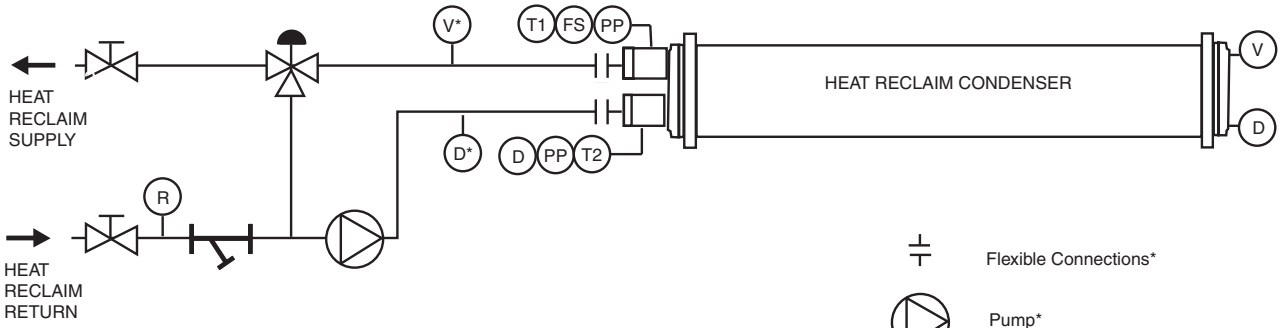

LEGEND

D* — Drain, Field Supplied
D — Drain, $^3/_8$-in. NPT
FS — Flow Switch
PP — Pipe Plug, $^1/_4$-in. NPT
R — Pressure Relief
T1 — Leaving Water Thermistor
T2 — Entering Water Thermistor
V* — Vent, Field Supplied
V — Vent, $^3/_8$-in. NPT

*Field-supplied and installed.

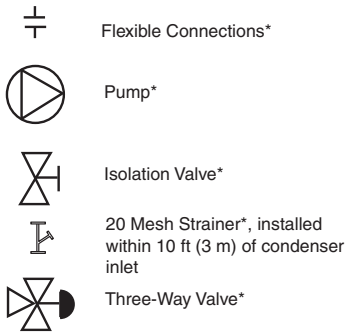

Fig. 32 — Typical Piping Diagram on 30RB Units with Heat Reclaim Option

NOTE: Locate the 3-way valve as close as possible to the chiller to minimize head pressure control response time.

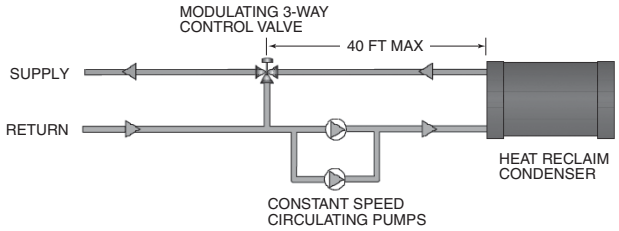

Fig. 33A — Three-Way Head Pressure Control Valve Location (Preferred)

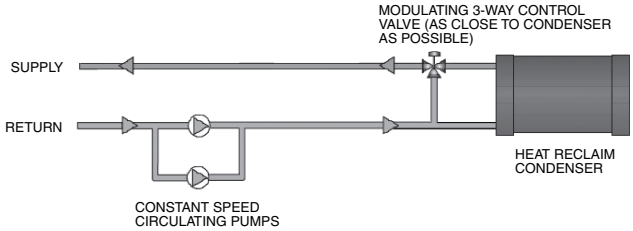

Fig. 33B — Three-Way Head Pressure Control Valve Location (Alternate)

FOR ALL UNITS

Dual Chiller Control Option — If the dual chiller algorithm is used, and the machines are installed in parallel, an additional chilled water sensor must be installed for each module. For 30RB315-390, a factory-supplied thermistor and well are shipped in the control box of each module. Install the wells in the common leaving water header. See Fig. 34.

Parallel chiller control with dedicated pumps is recommended. Chiller must start and stop its own water pump located in its own piping. If pumps are not dedicated for each chiller, then isolation valves are required. Each chiller must open and close its own isolation valve through the unit control (the valve must be connected to the pump outputs).

See Dual Chiller Control Option section on page 58 for more dual chiller leaving water sensor information.

Minimum Loop Volume — The preferred minimum loop volume is dependent on the type of application. In order to obtain leaving water temperature stability for comfort cooling applications, a minimum of 3 gallons per ton (3.25 liters per kW) is required on all unit sizes. For process cooling applications, applications where high stability is critical, or operation at ambient temperatures below 32 F (0° C) is expected, the loop volume should be increased to 6 to 10 gallons per ton (6.46 to 10.76 liters per kW) of cooling.

In order to achieve this volume, it may be necessary to add a water storage tank to the water loop. If a storage tank is added to the system, it should be properly vented so that the tank can be completely filled and all air eliminated. Failure to do so could cause lack of pump stability and poor system operation. Any storage tank that is placed in the water loop should have internal baffles to allow thorough mixing of the fluid. See Fig. 35. For units with heat reclaim option, a minimum condenser loop volume of 6 gallons per ton of heating (0.5 to 0.83 gallons [1.9 to 3.1 L] per 100 Btu/h of heating) capacity is necessary. In come cases, this will require the installation of a hot-water buffer tank.

System Piping — Proper system design and installation procedures should be followed closely. The system must be constructed with pressure tight components and thoroughly tested for leaks.

Installation of water systems should follow sound engineering practice as well as applicable local and industry standards. Improperly designed or installed systems may cause unsatisfactory operation and/or system failure. Consult a water treatment specialist or appropriate literature for information regarding filtration, water treatment, and control devices. Figure 29 shows a typical installation with components that might be installed with the hydronic package of the 30RB unit.

NOTE: It is recommended for units with the hydronic package that an inlet isolation (shutoff) valve be placed exterior to the unit to allow removal and service of the entire pump assembly, if necessary. The hydronic package is supplied from the factory with a combination valve for isolation of leaving water. Also, if the unit is isolated with valves, a properly sized pressure relief valve is recommended and should be installed in the piping between the unit and the valves, following all applicable local codes.

Air Separation — For proper system operation, it is essential that water loops be installed with proper means to manage air in the system. Free air in the system can cause noise, reduce terminal output, stop flow, or even cause pump failure due to pump cavitation. For closed systems, equipment should be provided to eliminate all air from the system.

The amount of air that water can hold in solution depends on the pressure and temperature of the water/air mixture. Air is less soluble at higher temperatures and at lower pressures. Therefore, separation can best be done at the point of highest water temperature and lowest pressure. Typically, this point would be on the suction side of the pump as the water is returning from the system or terminals. This is generally the optimal place to install an air separator, if possible.

1. Install automatic air vents at all high points in the system. (If the 30RB unit is located at the high point of the system, a vent can be installed on the piping leaving the heat exchanger on the $^1/_4$ in. NPT female port.)
2. Install an air separator in the water loop, at the place where the water is at higher temperatures and lower pressures — usually in the chilled water return piping. On a primary-secondary system, the highest temperature water is normally in the secondary loop, close to the decoupler. Preference should be given to that point on the system (see Fig. 36). In-line or centrifugal air separators are readily available in the field.

It may not be possible to install air separators at the place of the highest temperature and lowest pressure. In such cases, preference should be given to the points of highest temperature. It is important that the pipe be sized correctly so that free air can be moved to the point of separation. Generally, a water velocity of at least 2 feet per second (0.6 m per second) will keep free air entrained and prevent it from forming air pockets.

Automatic vents should be installed at all physically elevated points in the system so that air can be eliminated during system operation. Provisions should also be made for manual venting during the water loop fill.

IMPORTANT: Automatic vents should be located in accessible locations for maintenance purposes and protected from freezing.

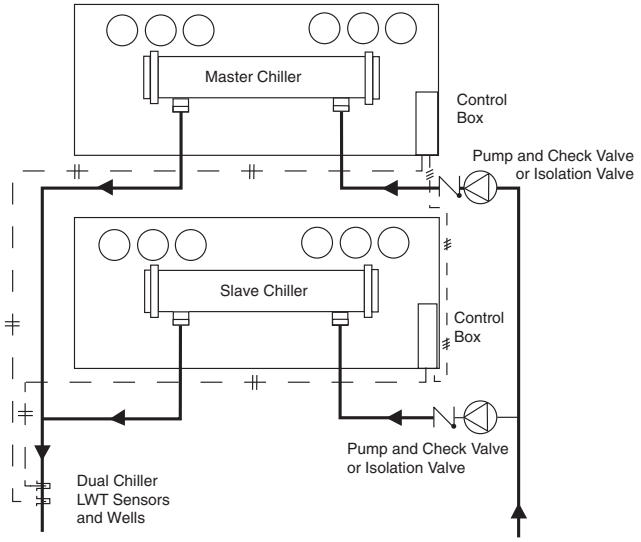

LEGEND

LWT — Leaving Water (Fluid) Temperature
– // – Field Wiring
– /// – Field Communication Wiring

NOTE: This is a simplified piping diagram — not all hydronic specialties are shown.

Fig. 34 — Dual Chiller Control Option Thermistor Location

Tank Installation

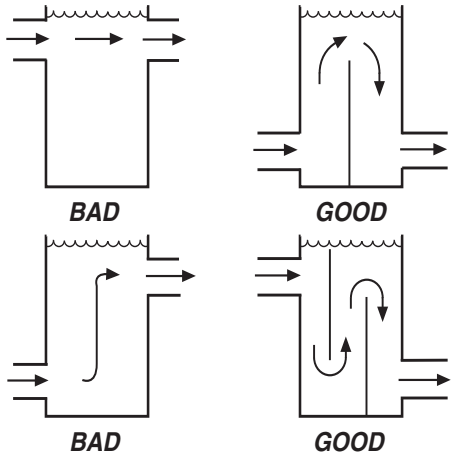

Fig. 35 — Tank Baffling

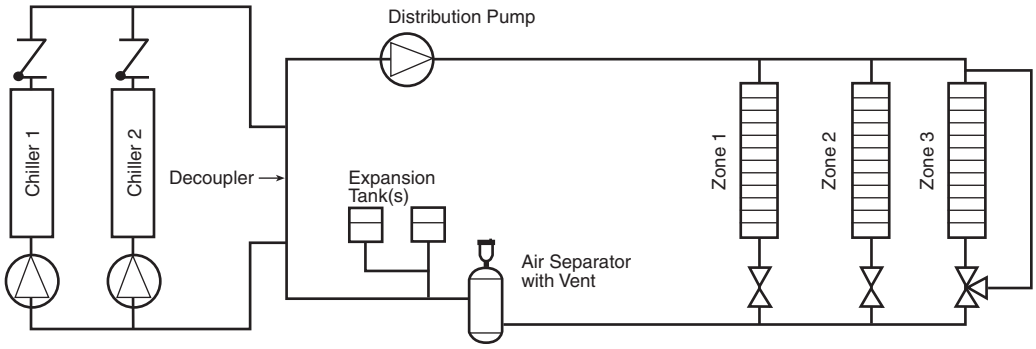

NOTE: Expansion tanks for 30RB hydronic kits must be installed for chillers piped in parallel in the primary water loop.

Fig. 36 — Typical Air Separator and Expansion Tank Location on Primary-Secondary Systems

Step 5 — Fill the Chilled Water and Heat Reclaim Loop

IMPORTANT: Before starting unit, be sure all of the air has been purged from the system.

The chilled water pump (if equipped) is rated for 150 psig (1034 kPa) duty. The maximum cooler water-side pressure is 300 psig (2068 kPa). Check the pressure rating for all of the chilled water devices installed. Do not exceed the lowest pressure rated device.

WATER SYSTEM CLEANING — Proper water system cleaning is of vital importance. Excessive particulates in the water system can cause excessive pump seal wear, reduce or stop flow, and cause damage of other components.

⚠ CAUTION

Failure to properly clean all piping and components of the chilled water or heat reclaim system before unit start-up may result in plugging of the heat exchanger, which can lead to poor performance, nuisance alarms and/or damage from freezing. Freezing damage caused by an improperly cleaned system represents abuse and may impair or otherwise negatively affect the Carrier product warranty.

⚠ CAUTION

Do not circulate water through unit without strainers in place. Failure to use the strainers represents abuse and may impair or otherwise negatively affect the Carrier product warranty.

1. Install a temporary bypass around the chiller to avoid circulating dirty water and particulates into the pump package and chiller during the flush. Use a temporary circulating pump during the cleaning process. Also, be sure that there is capability to fully drain the system after cleaning. See Fig. 37.
2. Be sure to use a cleaning agent that is compatible with all system materials. Be especially careful if the system contains any galvanized or aluminum components. Both detergent-dispersant and alkaline-dispersant cleaning agents are available.
3. It is recommended to fill the system(s) through a water meter. This provides a reference point for the future for loop volume readings, and it also establishes the correct quantity of cleaner needed in order to reach the required concentration.
4. Use a feeder/transfer pump to mix the solution and fill the system. Circulate the cleaning system for the length of time recommended by the cleaning agent manufacturer.
   a. After cleaning, drain the cleaning fluid and flush the system with fresh water.
   b. A slight amount of cleaning residue in the system can help keep the desired, slightly alkaline, water pH of 8 to 9. Avoid a pH greater than 10, since this will adversely affect pump seal components.
   c. A side stream filter is recommended (see Fig. 38) during the cleaning process. Filter side flow rate should be enough to filter the entire water volume every 3 to 4 hours. Change filters as often as necessary during the cleaning process.
   d. Remove temporary bypass when cleaning is complete.

A suction guide with an internal strainer is standard on all 30RB units with factory-installed hydronic packages. This strainer allows removal of particulates from the chilled water loop. Using the combination valve and the field-installed isolation valve at the inlet, the strainer can be isolated from the chilled water loop to be cleaned.

The *Comfort*Link controls provided have a built-in feature to remind building owners or operators to clean the strainer at a pre-set time interval. Properly installed, cleaned and maintained systems will rarely need the strainer cleaned after the initial fill. This time interval is user-configurable.

Ideally, the chilled water loop will be cleaned before the unit is connected. If the run-in screen is left in the suction guide/strainer, it is recommended that the Service Maintenance be set to alert the operator within 24 hours of start-up to be sure that the run-in screen in the suction guide/strainer is not removed at start-up.

NOTE: The suction guide/strainer must be removed after the first 24 hours of operation.

To set the time for the parameter, go to Time Clock/MCFG/W.FIL in the scrolling marquee or the handheld Navigator™ display. Values for this item are input in days.

WATER TREATMENT — Fill the fluid loop with water and a corrosion-resistant inhibitor suitable for the water of the area. Consult the local water treatment specialist for characteristics of system water and a recommended inhibitor for the cooler or heat reclaim fluid loop.

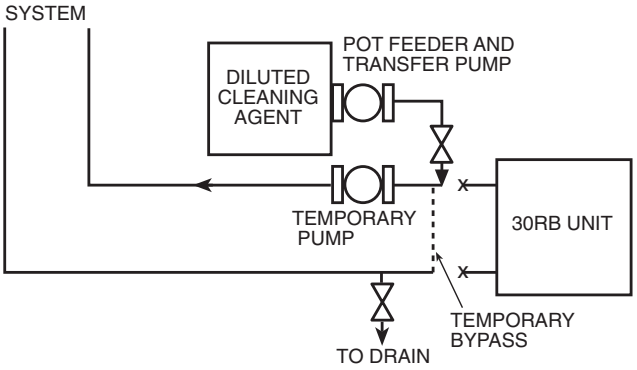

Fig. 37 — Typical Set Up for Cleaning Process

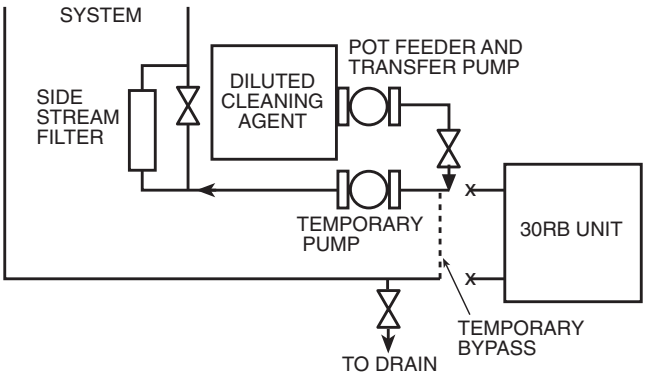

Fig. 38 — Cleaning Using a Side Stream Filter

SYSTEM PRESSURIZATION — A proper initial cold fill pressure must be established before filling of the unit. The initial cold fill pressure is the pressure applied at the filling point to fill a system to its highest point, plus a minimum pressure at the top of the system (4 psig minimum [27.6 kPa]) to operate air vents and positively pressurize the system. The expansion tank is very important to system pressurization. The expansion tank serves several purposes:

1. Provide NPSH (net positive suction head) required for the pump to operate satisfactorily.
2. Set system pressure.
3. Accommodate expansion or contraction of water due to temperature changes.
4. Act as a pressure reference for the pump.

The expansion tank pressure must be set BEFORE the system is filled. Follow the manufacturer's recommendation for instructions on setting the pressure in the expansion tank. The net positive suction head pressure required information is provided on the pump curves in Fig. 39-51 for units with factory-installed hydronic kits. See Table 6 for pump impeller sizes.

Once the system is pressurized, the pressure at the connection point of the expansion tank to water piping will not change unless the water loop volume changes (either due to addition/subtraction of water or temperature expansion/contraction). The pressure at this point remains the same regardless of whether or not the pump is running.

Since the expansion tank acts as a reference point for the pump, there cannot be two reference points (two expansion tanks) in a system, unless manifolded together. Where two or more 30RB chillers with the hydronic option are installed in parallel, there should not be more than one expansion tank in the system, unless manifolded together as seen in Fig. 36. It is permissible to install the expansion tank(s) in a portion of the return water line that is common to all pumps, providing that the tank is properly sized for combined system volume.

If the application involves two or more chillers in a primary secondary system, a common place for mounting the expansion tank is in the chilled water return line, just before the decoupler. See Fig. 36 for placement of expansion tank in primary-secondary systems.

If a diaphragm expansion tank is utilized (a flexible diaphragm physically separates the water/air interface) it is not recommended to have any air in the water loop. See the section on air separation on page 42 for instructions on providing air separation equipment.

FILLING THE SYSTEM(S) — The initial fill of the chilled water or heat reclaim system must accomplish three goals:

1. The entire piping system must be filled with water.
2. The pressure at the top of the system must be high enough to vent air from the system (usually 4 psig [27.6 kPa] is adequate for most vents).
3. The pressure at all points in the system must be high enough to prevent flashing in the piping or cavitation in the pump.

The pressure created by an operating pump affects system pressure at all points except one — the connection of the expansion tank to the system. This is the only location in the system where pump operation will not give erroneous pressure indications during the fill. Therefore, the best location to install the fill connection is close to the expansion tank. An air vent should be installed close by to help eliminate air that enters during the fill procedure.

When filling the system, ensure the following:

1. Remove temporary bypass piping and cleaning/flushing equipment.
2. Check to make sure all drain plugs are installed.

Table 6 — Pump Impeller Sizes

UNIT 30RB	PUMP Hp	SINGLE PUMP				DUAL PUMP			
		Option Code*	Rpm	Impeller Dia. (in.)	Pump Curve	Option Code*	Rpm	Impeller Dia. (in.)	Pump Curve
060 070	3	0,F	1750	6.5	I	6,M	1750	6.5	V
	5	1,G	1750	7.3	I	7,N	1750	7.3	V
	7.5	2,H	1750	8.15	I	8,P	1750	8.15	V
						9,T	3450	5.25	VI
	10	3,J	3450	5.4	II	B,Q	3450	5.4	VI
080 090 100	5	1,G	1750	7.3	I	7,N	1750	7.3	V
	7.5	2,H	1750	8.15	I	8,P	1750	8.15	V
	10	3,J	3450	5.4	II	B,Q	3450	5.4	VIIA
	15	4,K	3450	6.1	II	C,R	3450	6.0	VIIC
110 120 130	5	1,G	1750	7.3	I	7,N	1750	7.3	V
	7.5	2,H	1750	8.15	I	8,P	1750	8.15	V
	10	3,J	3450	5.4	II	B,Q	3450	5.4	VIIA
	15	4,K	3450	6.1	II	C,R	3450	6.0	VIIC
150 160 170 190	5	1,G	1750	6.5	IIIA	—	—	—	—
	7.5	2,H	1750	7.4	IIIB	9,T	3450	5.0	VIIB
	10	3,J	3450	4.6	IVA	B,Q	3450	4.6	VIIIA
	15	4,K	3450	5.2	IVB	C,R	3450	5.2	VIIIB

*Option Code refers to the Hydronics Option (position 11) in the model number. See Fig. 1 for option identification.

NOTE: Pump Selections are chiller size dependent. For example, dual pump "C" on a 30RB170 chiller is not the same as dual pump "C" on a 30RB130 chiller.

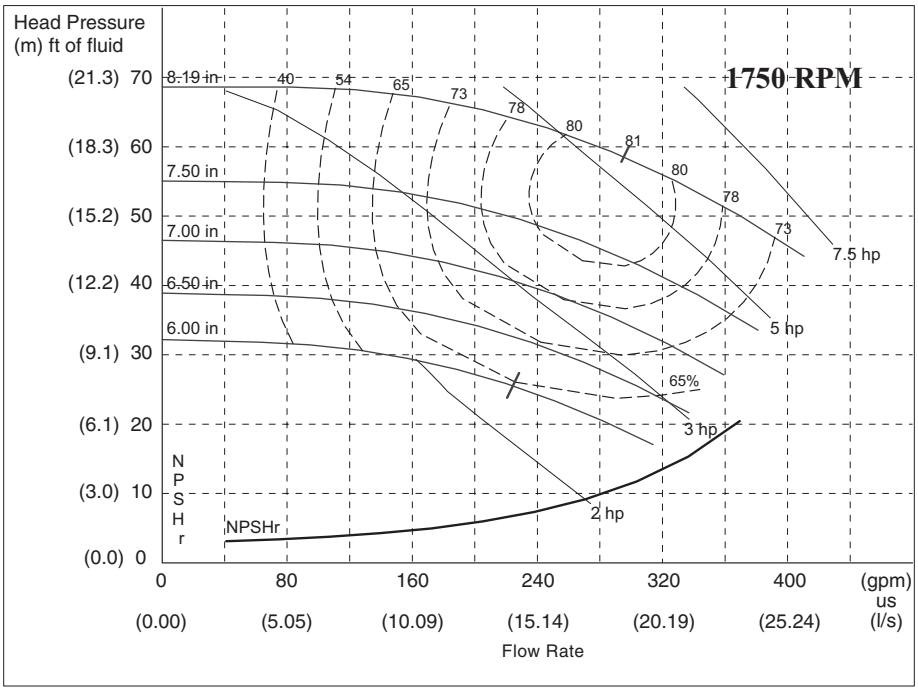

LEGEND

NPSHr — Net Positive Suction Head (Pressure) Required

NOTE: Refer to the 30RB nomenclature, Fig. 1, for option identification. Refer to the Pump Impeller Sizes, Table 6, for more information.

Fig. 39 — Pump Curve I for Hydronic Package Single Pump (Fresh Water)

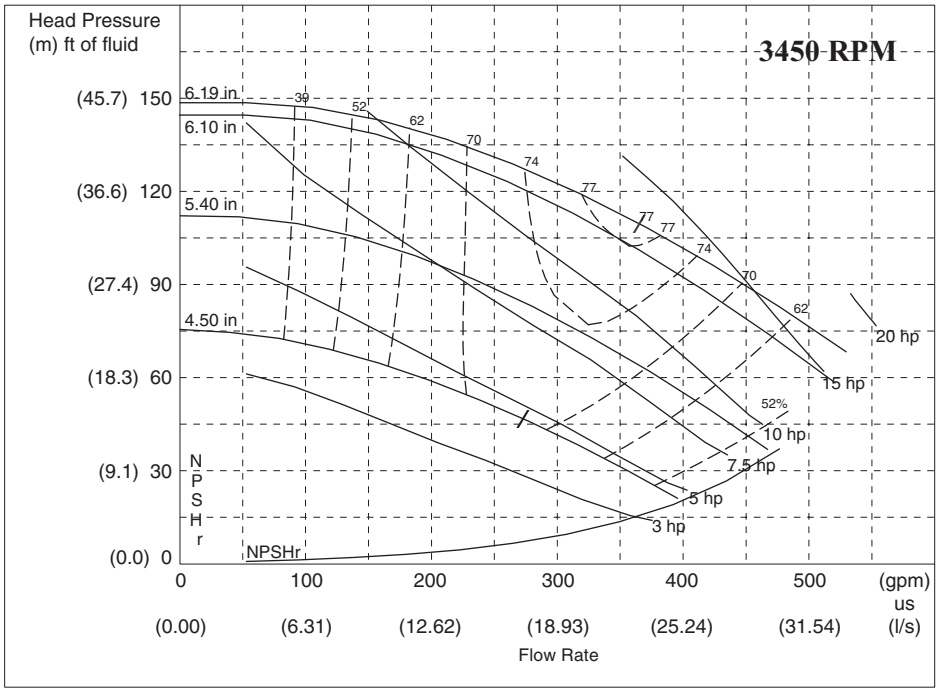

LEGEND

NPSHr — Net Positive Suction Head (Pressure) Required

NOTE: Refer to the 30RB nomenclature, Fig. 1, for option identification. Refer to the Pump Impeller Sizes, Table 6, for more information.

Fig. 40 — Pump Curve II for Hydronic Package Single Pump (Fresh Water)

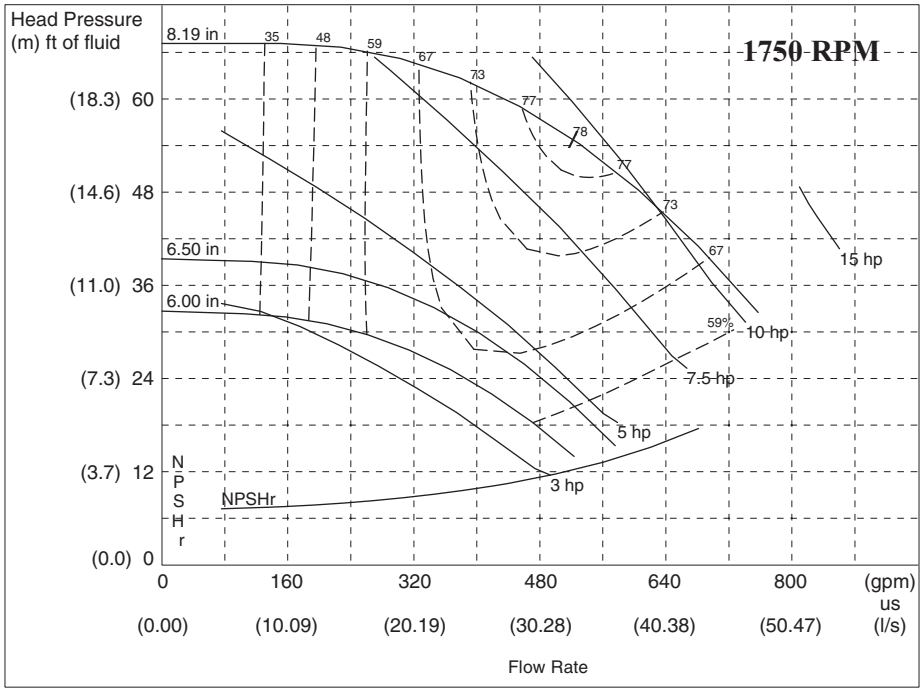

LEGEND

NPSHr — Net Positive Suction Head (Pressure) Required

NOTE: Refer to the 30RB nomenclature, Fig. 1, for option identification. Refer to the Pump Impeller Sizes, Table 6, for more information.

Fig. 41 — Pump Curve IIIA for Hydronic Package Single Pump (Fresh Water)

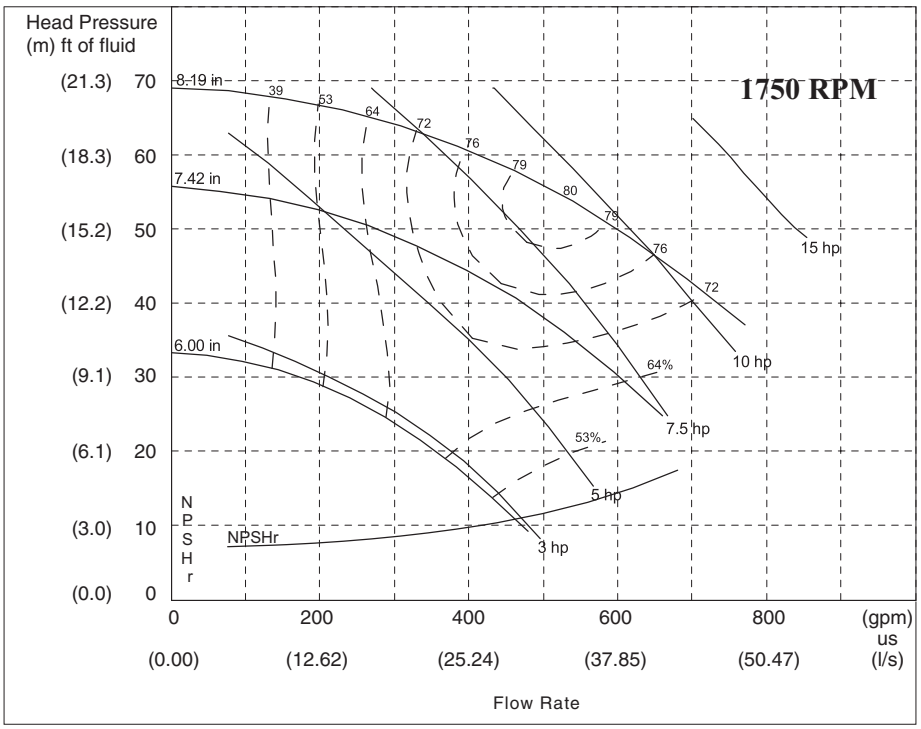

LEGEND

NPSHr — Net Positive Suction Head (Pressure) Required

NOTE: Refer to the 30RB nomenclature, Fig. 1, for option identification. Refer to the Pump Impeller Sizes, Table 6, for more information.

Fig. 42 — Pump Curve IIIB for Hydronic Package Single Pump (Fresh Water)

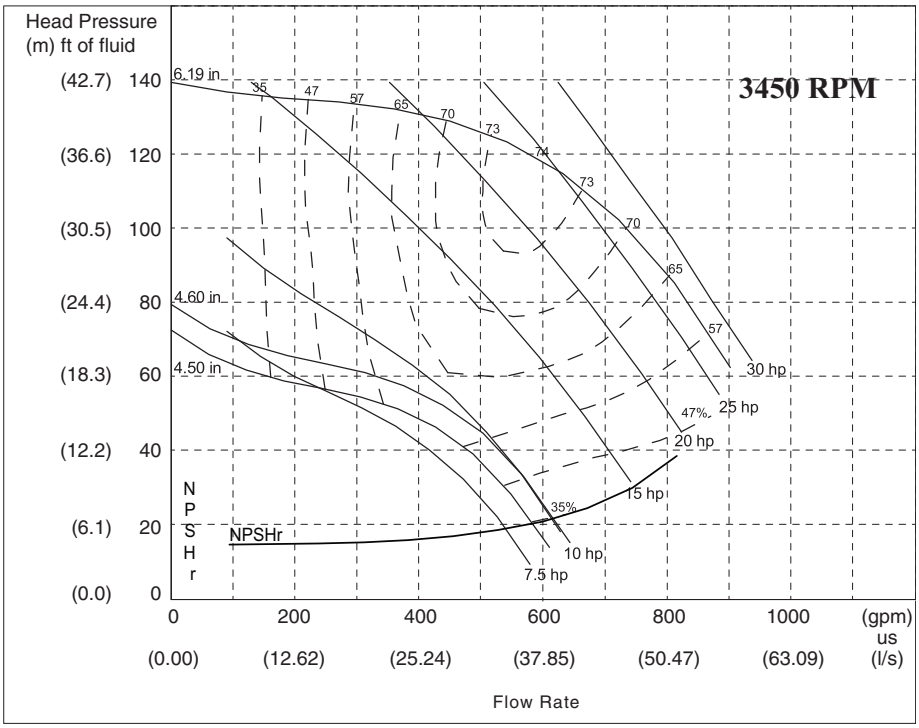

LEGEND

NPSHr — Net Positive Suction Head (Pressure) Required

NOTE: Refer to the 30RB nomenclature, Fig. 1, for option identification. Refer to the Pump Impeller Sizes, Table 6, for more information.

Fig. 43 — Pump Curve IVA for Hydronic Package Single Pump (Fresh Water)

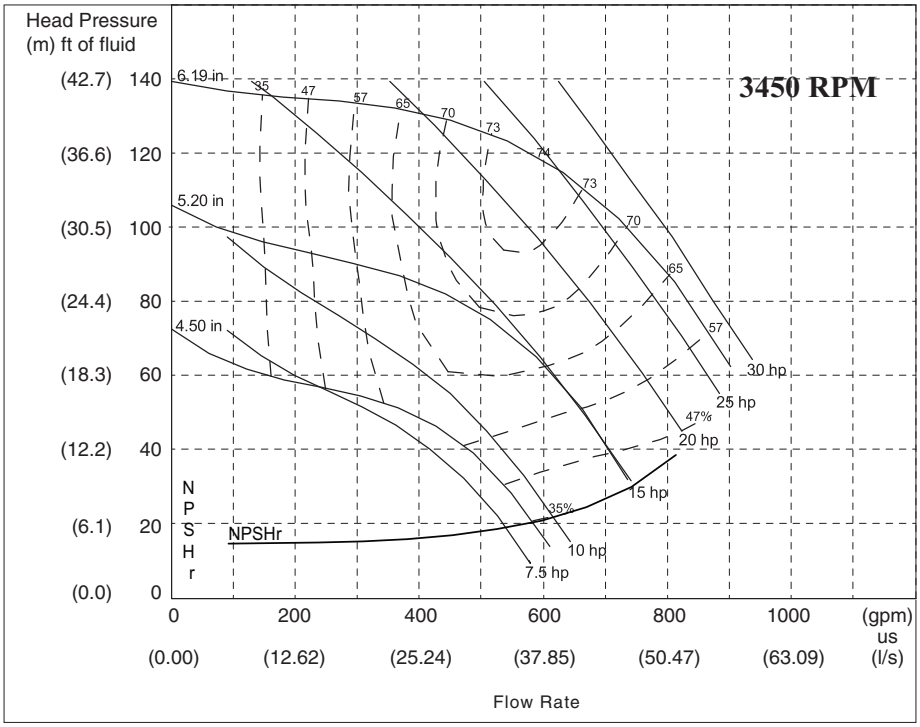

LEGEND

NPSHr — Net Positive Suction Head (Pressure) Required

NOTE: Refer to the 30RB nomenclature, Fig. 1, for option identification. Refer to the Pump Impeller Sizes, Table 6, for more information.

Fig. 44 — Pump Curve IVB for Hydronic Package Single Pump (Fresh Water)

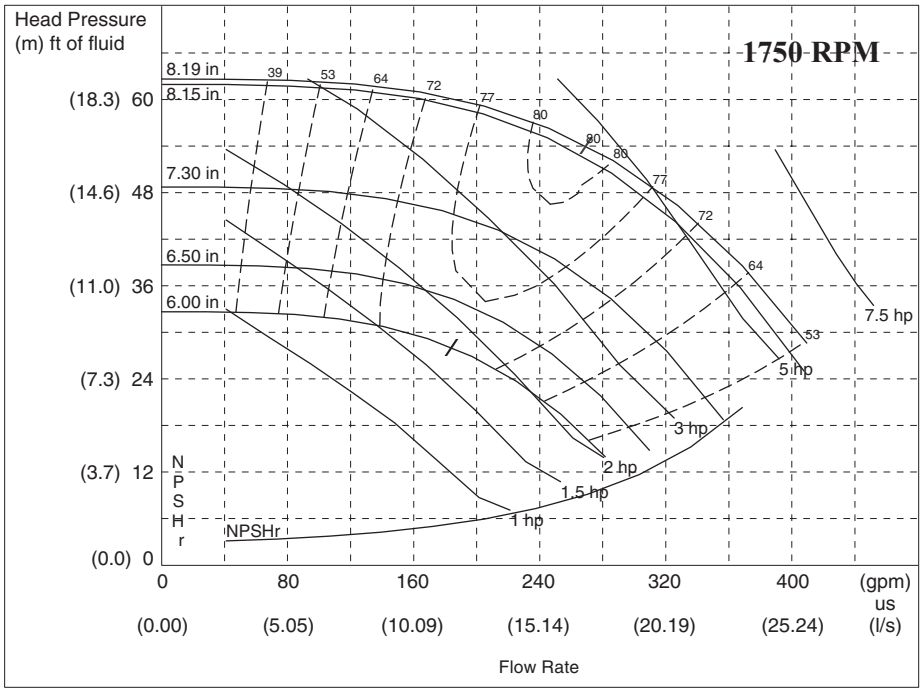

LEGEND

NPSHr — Net Positive Suction Head (Pressure) Required

NOTE: Refer to the 30RB nomenclature, Fig. 1, for option identification. Refer to the Pump Impeller Sizes, Table 6, for more information.

Fig. 45 — Pump Curve V for Hydronic Package Dual Pump (Fresh Water)

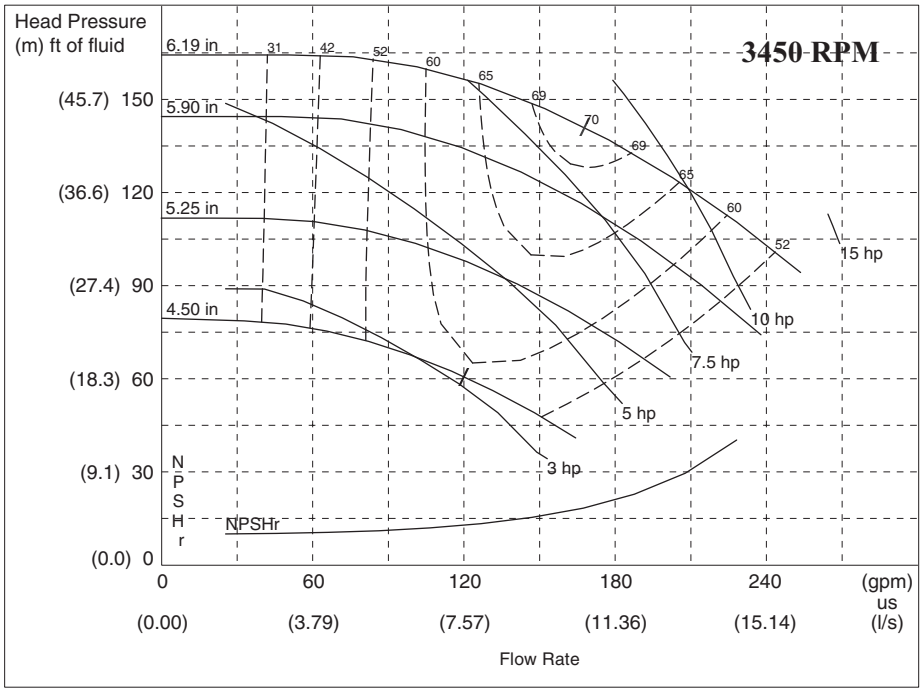

LEGEND

NPSHr — Net Positive Suction Head (Pressure) Required

NOTE: Refer to the 30RB nomenclature, Fig. 1, for option identification. Refer to the Pump Impeller Sizes, Table 6, for more information.

Fig. 46 — Pump Curve VI for Hydronic Package Dual Pump (Fresh Water)

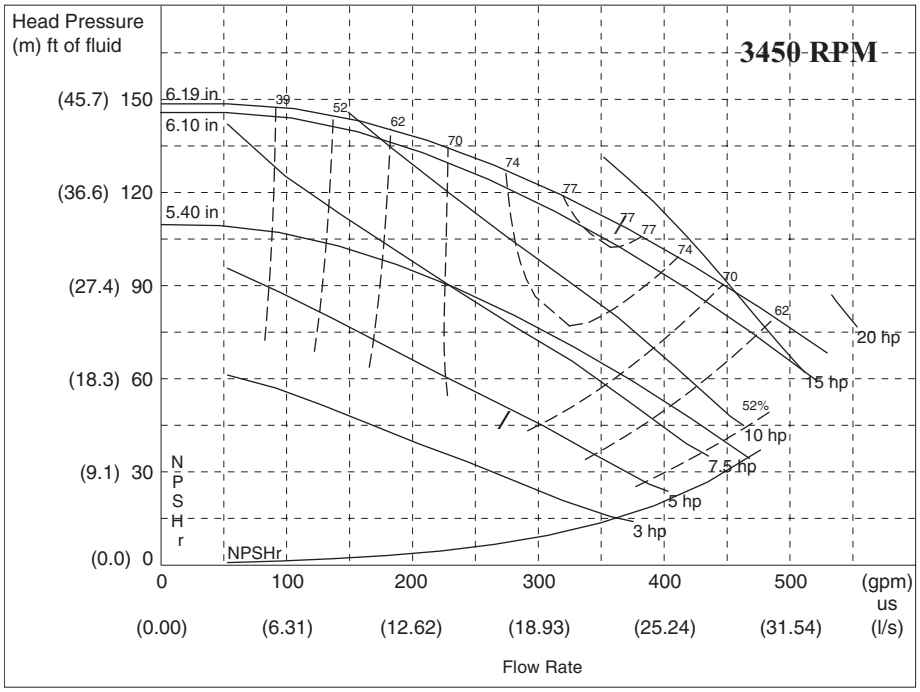

LEGEND

NPSHr — Net Positive Suction Head (Pressure) Required

NOTE: Refer to the 30RB nomenclature, Fig. 1, for option identification. Refer to the Pump Impeller Sizes, Table 6, for more information.

Fig. 47 — Pump Curve VIIA for Hydronic Package Dual Pump (Fresh Water)

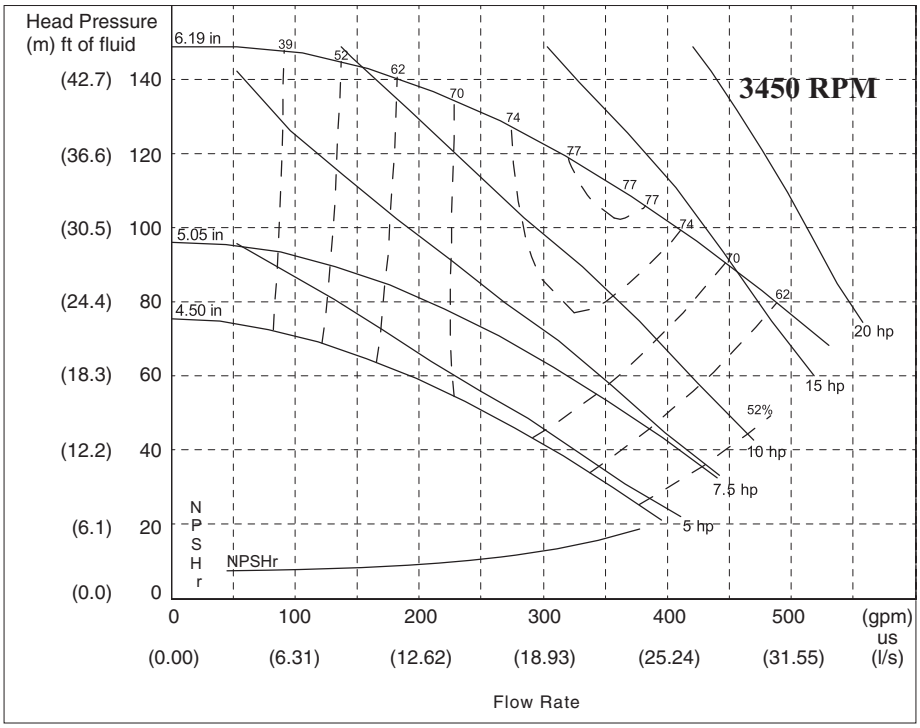

LEGEND

NPSHr — Net Positive Suction Head (Pressure) Required

NOTE: Refer to the 30RB nomenclature, Fig. 1, for option identification. Refer to the Pump Impeller Sizes, Table 6, for more information.

Fig. 48 — Pump Curve VIIB for Hydronic Package Dual Pump (Fresh Water)

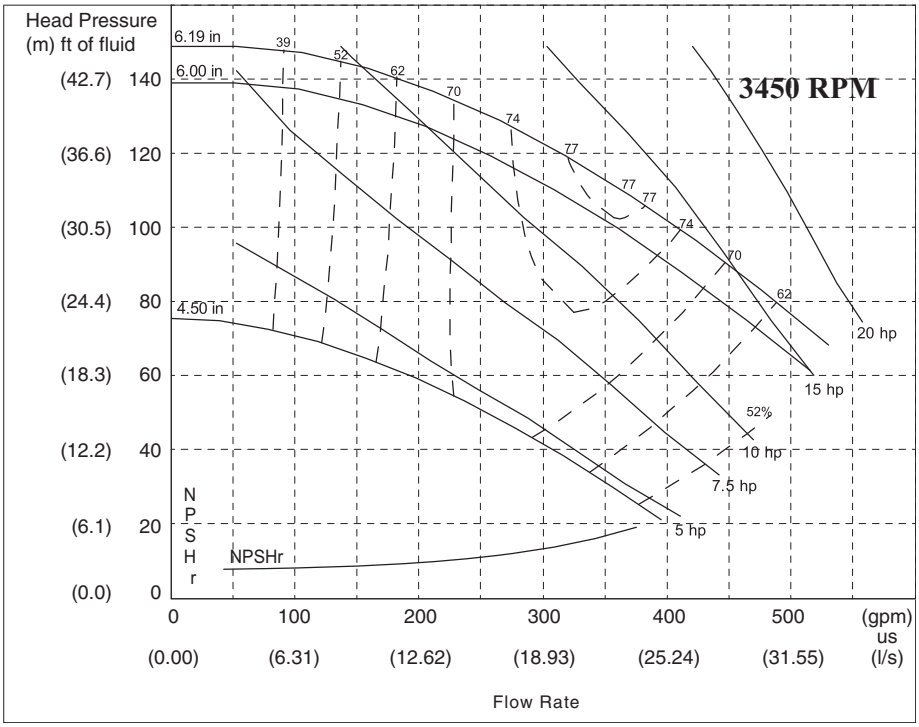

LEGEND

NPSHr — Net Positive Suction Head (Pressure) Required

NOTE: Refer to the 30RB nomenclature, Fig. 1, for option identification. Refer to the Pump Impeller Sizes, Table 6, for more information.

Fig. 49 — Pump Curve VIIC for Hydronic Package Dual Pump (Fresh Water)

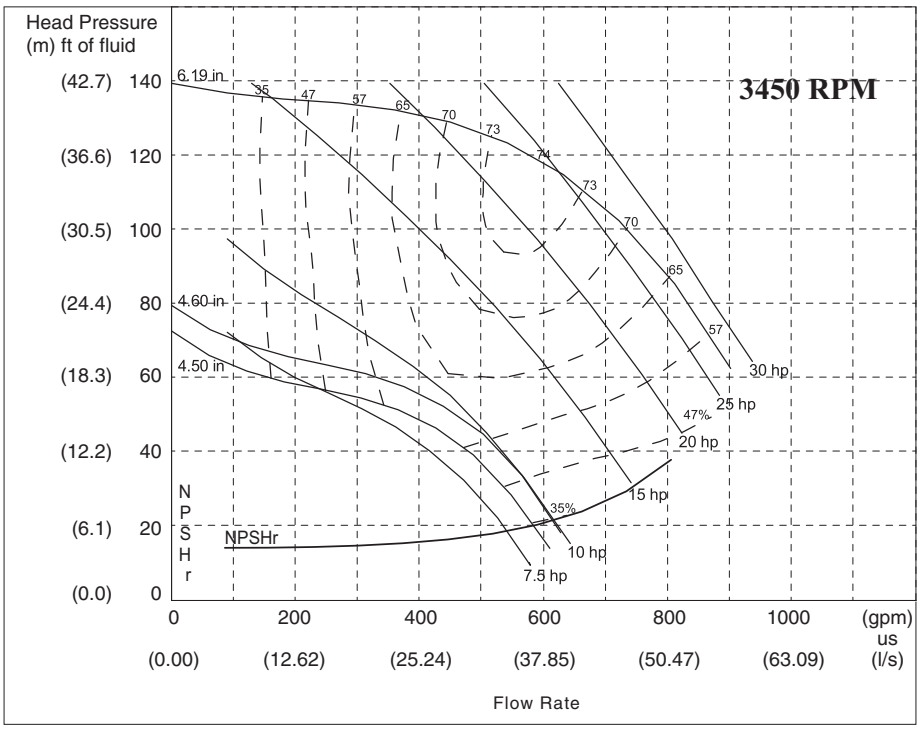

LEGEND

NPSHr — Net Positive Suction Head (Pressure) Required

NOTE: Refer to the 30RB nomenclature, Fig. 1, for option identification. Refer to the Pump Impeller Sizes, Table 6, for more information.

Fig. 50 — Pump Curve VIIIA for Hydronic Package Dual Pump (Fresh Water)

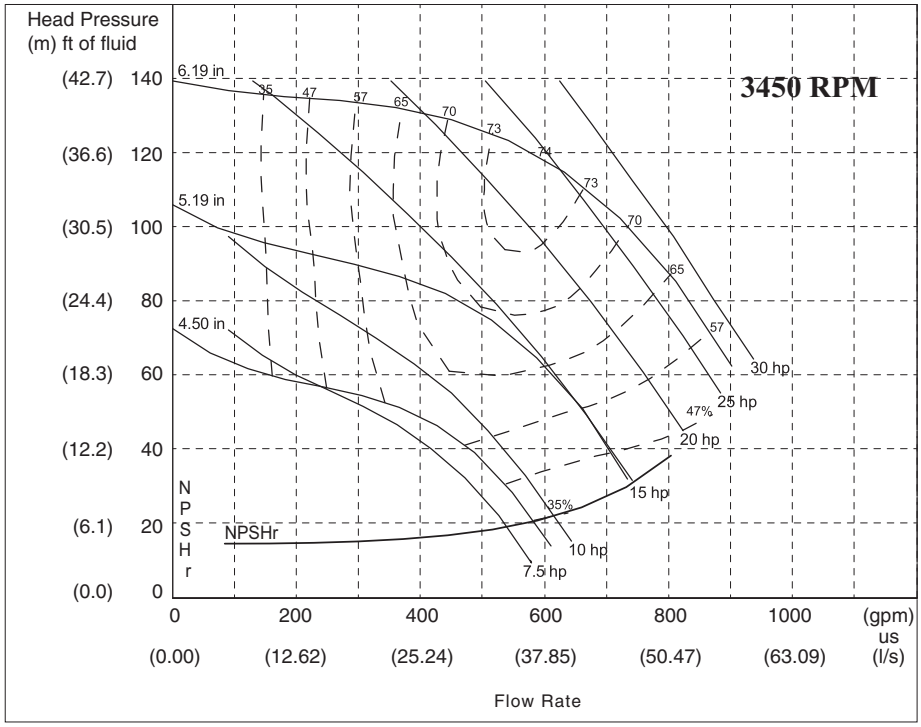

LEGEND

NPSHr — Net Positive Suction Head (Pressure) Required

NOTE: Refer to the 30RB nomenclature, Fig. 1, for option identification. Refer to the Pump Impeller Sizes, Table 6, for more information.

Fig. 51 — Pump Curve VIIIB for Hydronic Package Dual Pump (Fresh Water)

Normally, a closed system needs to be filled only once. The actual filling process is a fairly simple procedure. All air should be purged or vented from the system. Thorough venting at high points and circulation at room temperature for several hours is highly recommended.

NOTE: Local codes concerning backflow devices and other protection of the city water system should be consulted and followed to prevent contamination of the public water supply. This is critical when antifreeze is used in the system.

SET WATER FLOW RATE — Once the system is cleaned, pressurized, and filled, the flow rate through the chiller and heat reclaim needs to be established. Refer to the Job Submittal for flow rate requirements. See the Controls and Troubleshooting literature for operating limits. On units with the hydronic package, this can be accomplished by using the balancing valve. Follow the manufacturer's recommendations for setting the balancing valve. Local codes may prohibit restricting the amount of water using the balancing valve for a given motor horsepower. In this case, use the method listed in the Pump Modification/Trimming section. See Table 7 for the type of combination valve in 30RB units with the optional hydronic package.

Table 7 — Combination Valve Details

30RB UNIT	SINGLE/DUAL PUMP
060-130	FTV-4 in.
150-190	FTV-6 in.

NOTE: Carrier recommends a differential pressure gage when measuring pressures across the pumps or balancing valves. This provides for greater accuracy and reduces error build-up that often occurs when subtracting pressures made by different gages.

A rough estimate of water flow can also be obtained from the pressure gages across the 30RB heat exchangers.

Figures 52-56 show the relationship between gpm and heat exchanger pressure drop. It should be noted that these curves are for fresh water and "clean" heat exchangers; they do not apply to heat exchangers with fouling. To read the chart, subtract the readings of the two pressure gages on the hydronic kit. This number is the pressure drop across the heat exchanger. Adjust the factory-installed balancing valve or external balancing valve (in units without hydronic package) until the correct pressure drop is obtained for the required gpm.

PUMP MODIFICATION/TRIMMING — Since the pumps are constant speed, the only way to obtain greater flow with a given pump/impeller is to decrease system head. This will allow the pump to "ride" its curve to the right, resulting in increased flow. If greater flow is necessary, consider opening the combination valve. Also, verify that the strainer is clean, and that no unnecessary system resistance is present, such as partially closed isolation valves.

Once the combination valve is set, note the stem position. If later service work requires the valve to be closed, it will be easier to re-balance the system, if the original balance point is known.

Increasing system resistance by closing the balancing valve will force the pump to "ride" its curve to the left, resulting in less flow. Although this does reduce power consumption slightly, it may not be the desirable method of reducing the flow, especially if a large reduction is needed.

The other method for reducing flow on a constant speed pump is impeller trimming. The impellers in the pumps provided in the 30RB hydronic kit can be easily removed for this purpose. Refer to the vendor literature packet supplied with the hydronic package information on Seal Replacement in the Service Section, and follow instructions for impeller removal and trimming. Trimming should only be done by a qualified machine shop that has experience in this operation. Contact your local Carrier representative for a recommended machine shop.

⚠ CAUTION

After trimming, the impeller MUST be balanced. Failure to balance trimmed impellers can result in excessive vibration, noise, and premature bearing failure.

Impeller trimming has the added benefit of maximum bhp (brake horsepower) savings, which can recover the cost incurred by performing the impeller trimming.

PUMP VFD — Pumps may be ordered with a variable frequency drive (VFD) for speed control.

SENSORLESS CONTROL (CLOSED LOOP) — ACTIVE SETUP 1 — The VFD provided with the pump from the factory is configured for sensorless control. Default set points are entered for the unit according to nominal tonnage of the unit. Table 8 shows the settings from the factory. For details on operating the drive display, see the pump installation and operation manual, and for more detailed information on the drive, see IVS 102 Operating Instructions. These manuals are supplied in the control box of the chiller.

The following set points should be verified or modified for the actual installation.

Parameter 20-21 Setpoint, Hd, Ft-Wc

Parameter 22-89 Design Flow Setpoint, GPM

Parameter 22-87 Pressure at no-flow speed, Hmin, Ft-Wc (40% of Hd)

When changing set points, assure values are within the pump curve for the pump provided with the unit.

Minimum speed for the pump is set at 50 Hz, Parameter 4-12. This may be changed as long as the corresponding flow rate meets the minimum flow requirement for the chiller.

REMOTE SENSOR (CLOSED LOOP) — ACTIVE SETUP 2 — The drive may be set up to use a remote sensor instead of sensorless pump control. For a remote sensor control change Active Setup on the drive from 1 to 2, Parameter 0-10. The drive will read a 0-10vdc or a 0/4-20 mA signal from the sensor. Switch S2-01 must be set to Off (default setting) for 0-10 vdc or On for 0/4-20 mA. The switch is located behind the display. The cover must be removed and the display will snap off to access this switch.

The set point is defined by Parameter 20-21, Setpoint 1. This is a percentage of the maximum signal from the sensor. The default is 80%.

REMOTE CONTROLLER (OPEN LOOP) — ACTIVE SETUP 3 — Drive may be controlled by external sources. For a remote control of the drive change Active Setup on the drive to 3, Parameter 0-10. An input signal can used to control the drive speed. Input signal may be 0-10 vdc or 0/4-20 mA. The setup is the same as a remote sensor.

A BACnet card is also included with the drive. For BACnet, use Setup 3. The communication settings are in section 8 of the drive parameters. See drive manual for details.

Table 8 — Default Settings for Sensorless Control — Setup 1

SINGLE PUMP																							
Unit Size (tons)				60,70				80, 90, 100				110,120,130				150				160, 170, 190			
Pump				4380 3x3x8			4380 3x3x6	4380 3x3x8		4380 3x3x6		4380 3x3x8		4380 3x3x6		4380 4x4x8		4380 4x4x6		4380 4x4x8		4380 4x4x6	
HP				3	5	7.5	10	5	7.5	10	15	5	7.5	10	15	5	7.5	10	15	5	7.5	10	15
Impeller Dia (inches)				6.5	7.3	8.15	5.4	7.3	8.15	5.4	6.1	7.3	8.15	5.4	6.1	6.5	7.4	4.6	5.2	6.5	7.4	4.6	5.2
Param.	**Desc.**																						
20-21	Setpoint 1	Hd	ft wc	30	45	55	95	40	50	90	120	35	45	80	115	25	50	70	95	25	45	65	90
22-89	Flow at Design Point		gpm	150				200				270				340				410			
22-87	Press at No Flow Speed	40% Hd	ft wc	12	18	22	38	16	20	36	48	14	18	32	46	10	20	28	38	10	18	26	36

DUAL PUMP																							
Unit Size (tons)				60,70					80, 90, 100				110, 120, 130				150			160, 170, 190			
Pump				4382 4x4x8			4382 3x3x6		4382 4x4x8		4382 4x4x6		4382 4x4x8		4382 4x4x6		4382 4x4x6	4382 6x6x6		4382 4x4x6			
HP				3	5	7.5	7.5	10	5	7.5	10	15	5	7.5	10	15	7.5	10	15	7.5	10	15	
Impeller Dia (inches)				6.5	7.3	8.15	5.25	5.9	7.3	8.15	5.4	6.0	7.3	8.15	5.4	6.0	5.0	4.6	5.2	5.0	4.6	5.2	
Param.	**Desc.**																						
20-21	Setpoint 1	Hd	ft wc	30	45	55	75	95	40	50	90	120	35	45	80	115	50	70	95	45	65	90	
22-89	Flow at Design Point		gpm	150					200				270				340			410			
22-87	Press at No Flow Speed	40% Hd	ft wc	12	18	22	30	38	16	20	36	48	14	18	32	46	20	28	38	18	26	36	

PREPARATION FOR YEAR ROUND OPERATION — If the unit is in operation year-round, add sufficient suitable inhibited antifreeze solution such as propylene or ethylene glycol to chilled water and heat reclaim to prevent freezing under low-ambient temperature operating conditions. Consult local water treatment specialist on characteristics of water and recommended inhibitor.

> IMPORTANT: Glycol anti-freeze solutions are highly recommended since heater tapes provide no protection in the event of a power failure.

If the unit is equipped with low ambient temperature head pressure control, field-fabricated and field-installed wind baffles are required if the wind velocity is anticipated to be greater than 5 mph (8 km/h). Two different baffles are required, one for the control box end and one for the opposite end of the control box. Wind baffles should be constructed with minimum 18-gage galvanized sheet metal or other suitable corrosion-resistance material with cross breaks for strength. Use field-supplied screws to attach baffles to the corner posts of the machine. Be sure to hem or turn a flange on all edges to eliminate sharp edges on the baffles.

⚠ WARNING

Disconnect all power to the unit before performing maintenance or service. Unit may automatically start if power is not disconnected. Electrical shock and personal injury could result.

⚠ CAUTION

To avoid damage to the refrigerant coils and electrical components, use extreme care when drilling screw holes and screwing in fasteners.

Mount the smaller height baffle on the end of the control box. It is recommended that the upper notches be used for mounting the baffles. This reduces the risk of damaging the coil while drilling a mounting hole. Loosen the upper corner post bolts and slide the baffle under the bolt and washer. Tighten the bolts. Drill holes in the bottom of the flange of the baffle and mount with two screws to secure the bottom of the baffle to the corner post. Repeat the process for the opposite side. See Fig. 57.

FREEZE PROTECTION — The 30RB units are provided with a flow switch for chilled water to protect against freezing situations that occur from no water flow. For freeze protection of the chiller in case of power failure during subfreezing ambient temperatures, or in other cases where water temperature falls below the freezing mark, other methods must be used. Appropriate concentrations of inhibited propylene or ethylene glycol or other suitable inhibited antifreeze solution should be considered for chiller protection for both chilled water and heat reclaim, where ambient temperatures are expected to fall below 32 F (0° C). Consult local water treatment specialist on characteristics of the system water and add a recommended inhibitor to the chilled water. The Carrier warranty does not cover damage due to freezing.

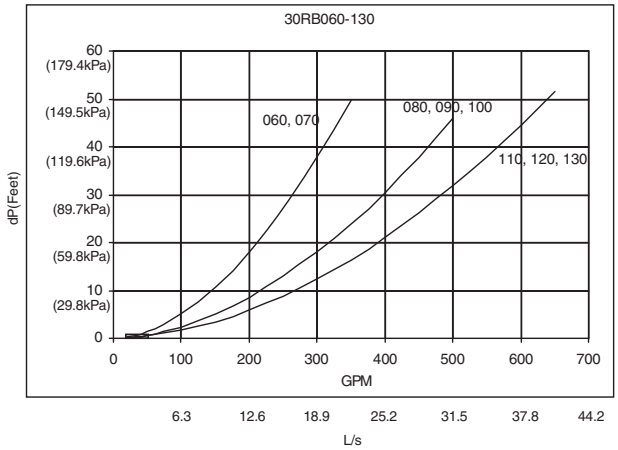

Fig. 52 — 30RB060-130 Cooler Pressure Drop Curves

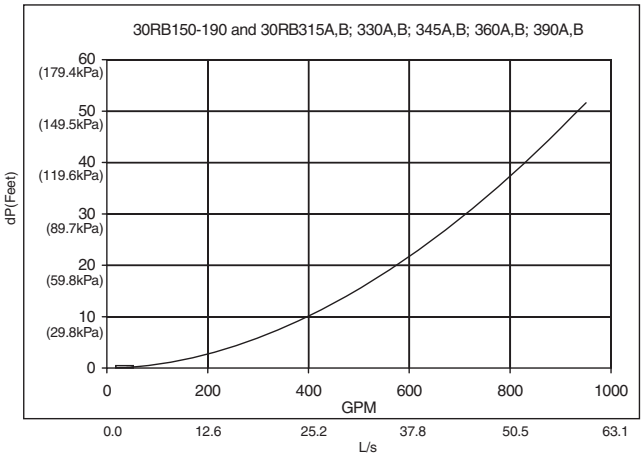

Fig. 53 — 30RB150-190 and 30RB315A,B; 345A,B; 360A,B; 390A,B Cooler Pressure Drop Curve

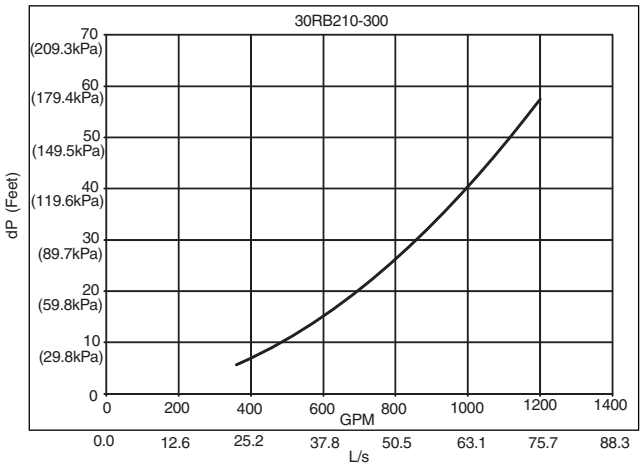

Fig. 54 — 30RB210-300 Cooler Pressure Drop Curve

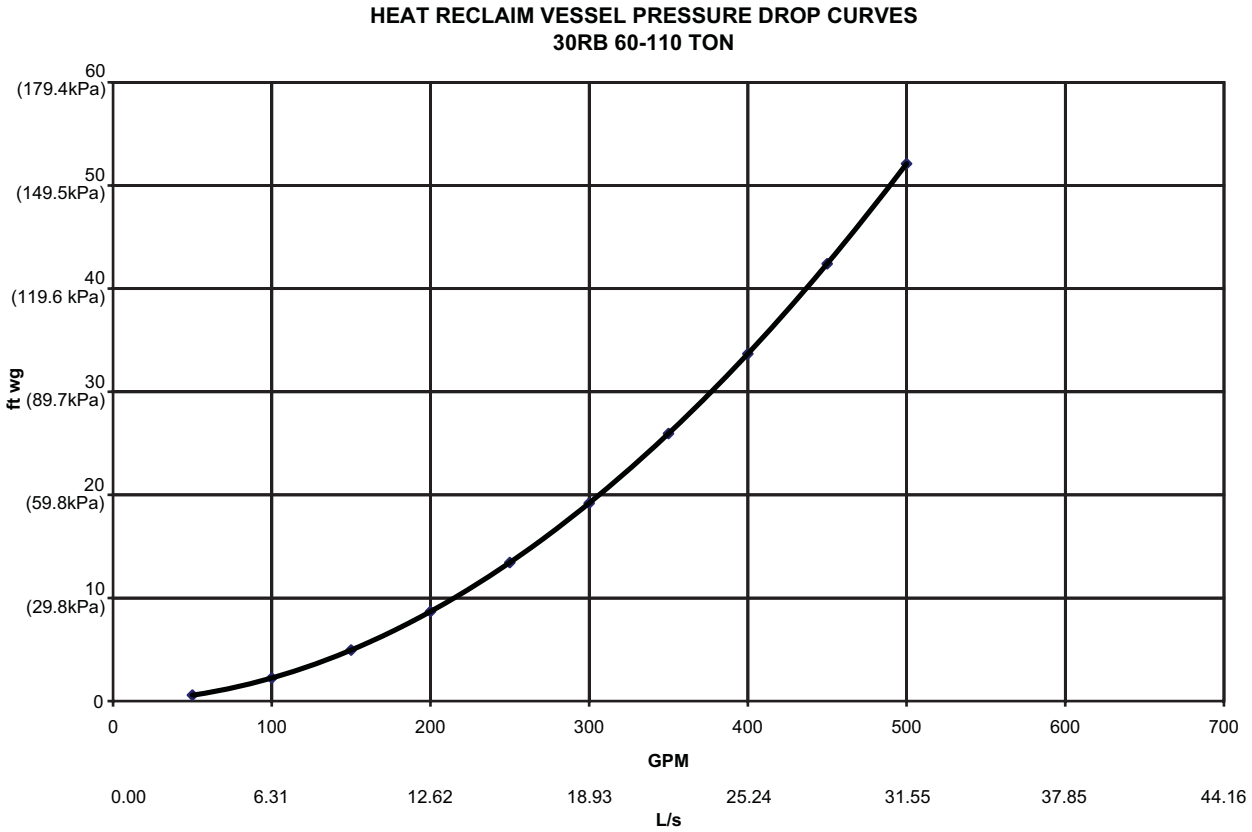

Fig. 55 — 30RB060-110 Optional Heat Reclaim Pressure Drop Curves

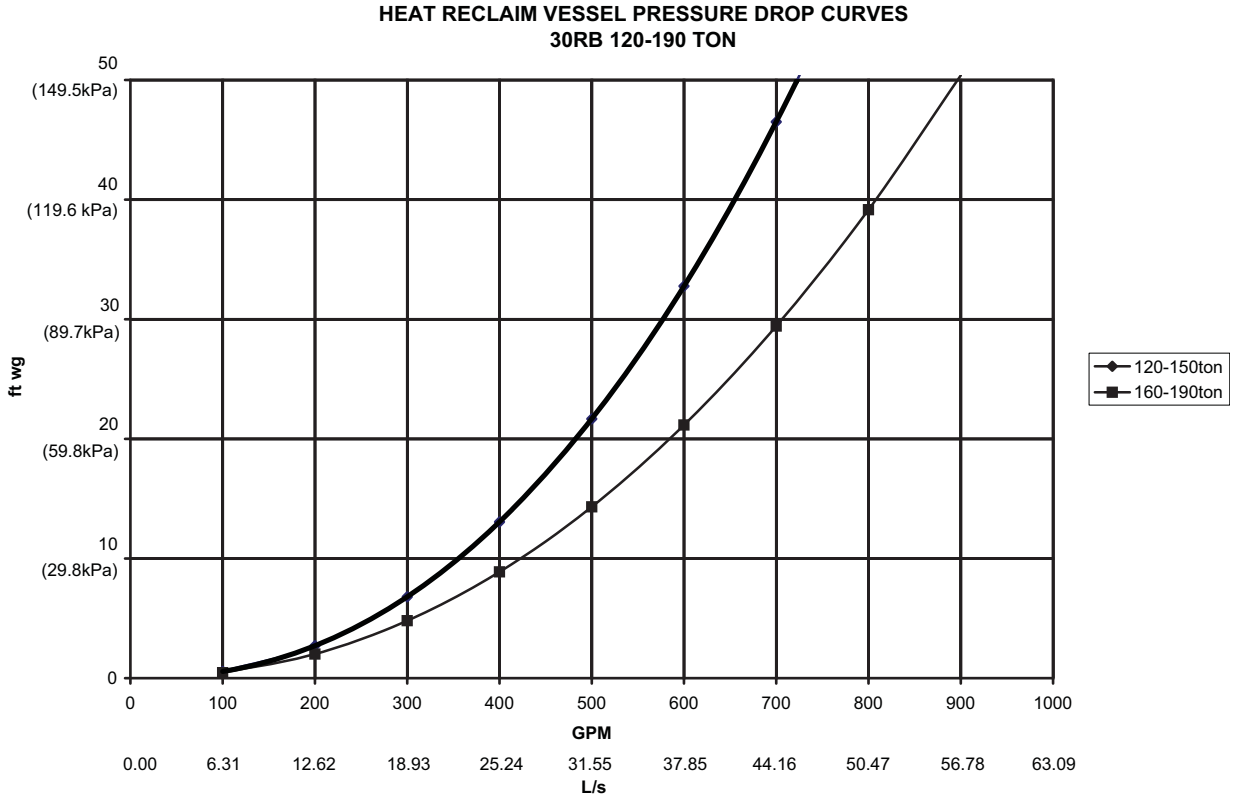

Fig. 56 — 30RB120-190 Optional Heat Reclaim Pressure Drop Curves

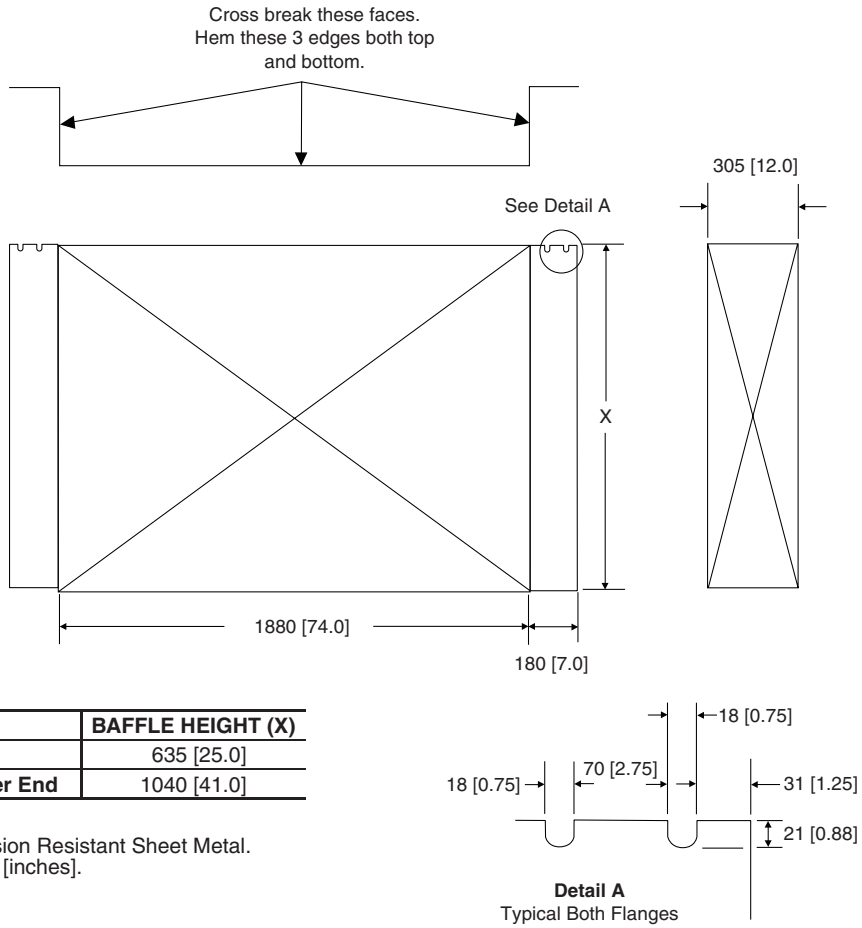

POSITION	BAFFLE HEIGHT (X)
Control/Power End	635 [25.0]
Opposite Control/Power End	1040 [41.0]

NOTES:
1. Material: 18 ga. Corrosion Resistant Sheet Metal.
2. Dimensions are in mm [inches].

Fig. 57 — Field-Fabricated and Field-Installed Wind Baffles

NOTE: Do not use automobile antifreeze, or any other fluid that is not approved for heat exchanger duty. Only use appropriately inhibited glycols, concentrated to provide adequate protection for the temperature considered.

1. Use an electric heater tape for the external piping, if unit will be exposed to freezing temperatures.
2. Ensure that power is available to the chiller at all times, even during the off-season, so that the pump, cooler heaters and heat reclaim have power. Also make sure that the piping tape heaters have power.
3. On units with pump packages, a heater is supplied with the hydronic package that will protect this section from freezing in outdoor-air temperatures down to –20 F (–29 C), except in the case of a power failure. If the pump will be subjected to freezing temperatures, steps must be taken to prevent freeze damage. If the pump will not be used during this time, it is recommended to drain the pump and hydronic package and these components are back-flushed with inhibited glycol. Otherwise, a glycol-water solution should be considered as the heat transfer fluid. Drains are located on the pump(s) and suction guide/strainer for units with hydronic kits. Units without hydronic kits have a drain mounted on the bottom of the heat exchanger near the leaving water connection of the heat exchanger. The Carrier warranty does not cover damage due to freezing.
4. Cooler heaters that will protect components down to –20 F (–28.9 C) can be ordered as a factory-installed option. It should be noted that these heaters will not protect the cooler from freezing in the event of a power failure. The Carrier warranty does not cover damage due to freezing.
5. Units with the heat reclaim option are supplied with a heater to protect the reclaim condenser down to 0° F (–18 C). If the unit controls the heat reclaim circulator pump and or valves to allow flow through the condenser, freeze protection to –20 F (–29 C) is provided. Again, it should be noted that the heaters and pump control will not protect the reclaim condenser from freezing in the event of a power failure. The Carrier warranty does not cover damage due to freezing.

PREPARATION FOR WINTER SHUTDOWN — If the unit is not operational during the winter months, at the end of cooling season, perform the following:

⚠ CAUTION

Failure to remove power before draining heater equipped coolers, heat reclaim condensers and hydronic packages can result in heater tape and insulation damage.

CHILLED WATER SYSTEM

1. If the unit has an optional heater on the cooler and the cooler will not be drained, do not shut off power disconnect during off-season shutdown. If the unit has an optional heater on the cooler and the cooler will be drained, open the circuit breaker for the heater, CB-HT or shut off power during off-season shutdown.
2. Draining the fluid from the system is highly recommended. If the unit is equipped with a hydronic package, there are additional drains in the pump housing and strainer that must be opened to allow for all of the water to drain.

3. Replace the drain plug and add 2 gallons (7.6 liters) of a suitable corrosion-inhibited anti-freeze solution such as propylene glycol to the cooler to prevent freezing of any remaining water in system. Antifreeze can be added through the vent on top of cooler. If the unit has a hydronic pump package, the pump must also be treated in the same manner.
4. Open one of the thermistor connections to allow air to escape the vessel and the anti-freeze to enter.
5. At the beginning of the next cooling season, be sure that there is refrigerant pressure on each circuit before refilling cooler, add recommended inhibitor, and reset the CB-HT (circuit breaker heater) (if opened) or restore power.

HEAT RECLAIM SYSTEM — At the end of each cooling season the fluid should be drained from the system. However, due to the heat reclaim condenser circuiting, some fluid will remain in the condenser after draining. To prevent freeze-up damage to the condenser tubes perform the following procedure.

1. If the heat reclaim condenser will not be drained do not shut off power disconnect during off-season shutdown. If the condenser will be drained, deenergize the heaters to prevent damage and possible safety hazards when draining, or when there is no liquid in the system. Open the condenser heater circuit breaker, CB-CDH7 to deenergize the heaters. Drain the fluid from the system.
2. Isolate the condenser from the rest of the system with water shut off valves.
3. Completely fill the condenser with an appropriate amount of inhibited ethylene glycol solution (or other suitable corrosion-inhibitive antifreeze) for 15 F (8.3 C) below the expected low ambient conditions.
4. Leave the condenser filled with the antifreeze solution for the winter, or drain if desired. Be sure to deenergize heaters as explained in Step 1 to prevent damages. Use an approved method of disposal when removing the antifreeze solution.
5. At the beginning of the next cooling season, be sure that there is refrigerant pressure on each circuit before refilling the condenser circuit, add recommended inhibitor and reset the CB-CDHT (if opened) to restore power.

Step 6 — Make Electrical Connections

⚠ WARNING

Electrical shock can cause personal injury and death. Shut off all power to this equipment during installation. There may be more than one disconnect switch. Tag all disconnect locations to alert others not to restore power until work is completed.

POWER SUPPLY — The electrical characteristics of the available power supply must agree with the unit nameplate rating. Supply voltage must be within the limits shown. Some units have options for multiple power connections. See Table 9 and Fig. 58 for elecrical connection information. See Tables 10A-14 for electrical requirements.

IMPORTANT: Operating unit on improper supply voltage or with excessive phase imbalance constitutes abuse and may adversely affect Carrier warranty.

POWER WIRING — All power wiring must comply with applicable local and national codes. Install field-supplied branch circuit fused disconnect per NEC of a type that can be locked OFF or OPEN. Disconnect must be within sight and readily accessible from the unit in compliance with NEC Article 440-14. In the power box, $^{7}/_{8}$ in. holes are provided for power entry. The holes will need to be enlarged to accept the appropriate conduit. NEC also requires all conduits from a conditioned space to the power box(es) be sealed to prevent airflow and moisture into the control box.

Duplex units require at least two separate power supplies, at least one for each module, depending on the power supply option ordered.

General Wiring Notes:

1. The control circuit does NOT require a separate power source. A step-down transformer from the main three-phase power supply obtains control circuit power. Be sure that the appropriate connection tap is connected on all transformers for the supply voltage. Up to three terminal blocks are provided for field-wired control devices.
2. Cooler heat reclaim condenser and pump heaters (if factory installed) are wired in the control circuit so they are operable as long as the main power supply to the unit is ON. A factory-installed and set overload device protects them.

NOTE: The field-supplied disconnect should never be off except when unit is being serviced or is to be down for a prolonged period, in which case the cooler and heat reclaim condenser should be drained if not properly protected.

3. Power entry depends on the size and power entry option ordered.
4. Maximum field wire sizes allowed by lugs on terminal block/non-fused disconnect are listed in Tables 10 and 11.
5. Terminals for field power supply are suitable for copper conductors. Insulation must be rated 75 C minimum.

IMPORTANT: To ensure power to the heaters, make sure power to the unit is always on (except during service or a prolonged shutdown).

⚠ CAUTION

Proper rotation of condenser fan(s) and pump(s) MUST be verified before pumps or compressors are started. Consult the Controls, Start-Up, Operation, Service and Troubleshooting guide provided with 30RB060-390 units for correct procedure. Improper pump rotation can cause permanent damage to pump impeller and housing. If pump(s) have been removed for trimming, verify wiring is reconnected in the original manner.

CONTROL POWER — Control power is obtained from the main power supply and does NOT require a separate source. A toggle switch (marked SW2 on the unit label diagram and by the switch) allows the control circuit to be manually disconnected when necessary. Cooler heat reclaim condenser and pump heaters (if installed) are in an inoperable state when this switch is in the Off position.

IMPORTANT: For 208-v systems, the connection tap for all transformers must be changed. The factory default setting is for 230-v. Failure to connect to the proper tap may result in unreliable operation.

FIELD CONTROL OPTION WIRING — Install field control wiring options. See Fig. 58 and 59. Some options, such as 4 to 20 mA demand limit that requires the energy management module, may require that accessories be installed first if not factory installed for terminal connections.

DUAL CHILLER CONTROL OPTION — If the dual chiller algorithm is used and the machines are installed in parallel, an additional chilled water sensor must be installed for each chiller. For 30RB315-390 units, a factory-supplied thermistor and well are shipped in the control box of each. Install the well in the common leaving water header. See Fig 34. Do not relocate the chiller's leaving water thermistors. They must remain in place for the unit to operate properly.

For the non-modular units, an accessory kit, part no. 00EFN900044000A, is available. This kit includes all parts necessary for dual chiller control.

The thermistor well is a $^1/_4$ in. NPT fitting for securing the well in the piping. The piping must be drilled and tapped for the well. Select a location that will allow for removal of the thermistor without any restrictions. See Fig. 60 and 61.

Once the well is inserted, install the thermistors. Insert the thermistor into the well until the O-ring reaches the well body. Use the nut on the thermistor to secure the thermistor in place. Once the thermistor is in place, it is recommended that a thermistor wire loop be made and secured with a wire tie to the chilled water pipe. This will aid in thermistor retention in the well. See Fig. 60. Attach connector (part no. HY06AM016) to thermistor lead. Plug connector into MBB J6-CH-3.

For 30RB315-390 units, as well as all units using the dual chiller algorithm, a Carrier Comfort Network® (CCN) bus must be connected between the two modules. See the Carrier Comfort Network Communication Bus Wiring section on page 70 for additional information.

Table 9 — Control and Power Connections, 30RB060-390

30RB UNIT SIZE	VOLTAGE	ELECTRICAL OPTION	CONNECTIONS	MAIN POWER ENTRANCE	CONTROL BOX
060,070	208/230, 380, 460, 575	Standard (Terminal Block)	Single Point	Circuit 1	Combination
			Dual Point	Circuit 1	Combination
				Circuit 2	Combination
		Non-Fused Disconnect Option*	Single Point	Circuit 1	Combination
080-120	208/230	Standard (Terminal Block)	Single Point	Circuit 1	Power-L
			Dual Point	Circuit 1	Power-L
				Circuit 2	Power-L
		Non-Fused Disconnect Option*	Single Point	Circuit 1	Power-L
	380, 460, 575	Standard (Terminal Block)	Single Point	Circuit 1	Combination
			Dual Point	Circuit 1	Combination
				Circuit 2	Combination
		Non-Fused Disconnect Option*	Single Point	Circuit 1	Combination
130-190, 315A-390A, 315B-390B	208/230	Standard (Terminal Block)	Single Point	Circuit 1	Power-L
			Dual Point	Circuit 1	Power-L
				Circuit 2	PEB1
		Non-Fused Disconnect Option	Single Point	Circuit 1	Power-L
			Dual Point	Circuit 1	Power-L
				Circuit 2	PEB1
	380, 460, 575	Standard (Terminal Block)	Single Point	Circuit 1	PEB1
			Dual Point	Circuit 1	PEB1
				Circuit 2	PEB1
		Non-Fused Disconnect Option	Single Point	Circuit 1	PEB1
			Dual Point	Circuit 1	PEB1
				Circuit 2	Power-L
210, 225	208/230†	Standard (Terminal Block)	Dual Point	Circuit 1	Power-L
				Circuit 2	PEB2
		Non-Fused Disconnect Option	Dual Point	Circuit 1	Power-L
				Circuit 2	PEB2
	380, 460, 575	Standard (Terminal Block)	Single Point	Circuit 1	PEB1
			Dual Point	Circuit 1	PEB1
				Circuit 2	PEB1
		Non-Fused Disconnect Option	Single Point	Circuit 1	PEB1
			Dual Point	Circuit 1	PEB1
				Circuit 2	Power-L
250-300	208/230†	Standard (Terminal Block)	Dual Point	Circuit 1	Power-L
				Circuit 2	PEB2
		Non-Fused Disconnect Option	Dual Point	Circuit 1	Power-L
				Circuit 2	PEB2
	380, 460, 575	Standard (Terminal Block)	Single Point	Circuit 1	PEB1
			Dual Point	Circuit 1	PEB1
				Circuit 2	PEB2
		Non-Fused Disconnect	Single Point	Circuit 1	PEB1
			Dual Point	Circuit 1	PEB1
				Circuit 2	PEB2

*Dual point connection is not available when non-fused disconnect option is selected.
†Single point connection not available.

NOTES:
1. "Combination" is identified as COMB1 in Fig. 58.
2. "Power-L" is the same as COMB1 in Fig. 58.
3. "PEB" or Power Electrical Box is shown in Fig. 58.

NOTES:

1. FACTORY WIRING IS IN ACCORDANCE WITH UL 1995 STANDARDS. FIELD MODIFICATIONS OR ADDITIONS MUST BE IN COMPLIANCE WITH ALL APPLICABLE CODES.
2. WIRING FOR MAIN FIELD SUPPLY MUST BE RATED 75C MINIMUM. USE COPPER FOR ALL UNITS.
   INCOMING WIRE SIZE RANGE FOR THE TERMINAL BLOCK IS #4 AWG TO 500 KCMIL.
   INCOMING WIRE SIZE RANGE OF NON-FUSED DISCONNECT WITH MCA UP TO 599.9 AMPS IS 3/0 TO 500 KCMIL.
   INCOMING WIRE SIZE RANGE OF NON-FUSED DISCONNECT WITH MCA FROM 600 TO 799.9 AMPS IS 1/0 TO 500 KCMIL.
   INCOMING WIRE SIZE RANGE OF NON-FUSED DISCONNECT WITH MCA FROM 800 TO 1199.9 AMPS IS 250 KCMIL TO 500 KCMIL.
3. TERMINALS 9 AND 10 OF TB5 ARE FOR FIELD EXTERNAL CONNECTIONS FOR REMOTE ON-OFF. THE CONTACTS MUST BE RATED FOR DRY CIRCUIT APPLICATION CAPABLE OF HANDLING A 24VAC LOAD UP TO 50 MA.
4. TERMINALS 1 AND 2 OF TB5 ARE FOR EXTERNAL CONNECTIONS OF CHILLED WATER PUMP INTERLOCK. THE CONTACTS MUST BE RATED FOR DRY CIRCUIT APPLICATION CAPABLE OF HANDLING A 24VAC LOAD UP TO 50 MA.
5. TERMINALS 11 AND 13 OF TB5 ARE FOR CONTROL OF CHILLED WATER PUMP1 (PMP1) STARTER. TERMINALS 13 AND 15 OF TB5 ARE FOR CONTROL OF CHILLED WATER PUMP2 (PMP2) STARTER. THE MAXIMUM LOAD ALLOWED FOR THE CHILLED WATER PUMP RELAY IS 5 VA SEALED, 10 VA INRUSH AT 24V. FIELD POWER SUPPLY IS NOT REQUIRED.
6. FOR CONTROL OF CHILLED WATER PUMPS, A SET OF NORMALLY OPEN CONTACTS RATED FOR DRY CIRCUIT APPLICATION MUST BE SUPPLIED FROM FIELD SUPPLIED PUMP STARTER RELAY. CONNECT CONTACTS TO VIOLET AND PINK WIRES IN HARNESS FROM MAIN BASE BOARD CHANNEL 18. WIRES IN HARNESS ARE MARKED PMP1-13 AND PMP1-14.
7. TERMINALS 12 AND 13 OF TB5 ARE FOR A ALARM RELAY. THE MAXIMUM LOAD ALLOWED FOR THE ALARM RELAY IS 10 VA SEALED, 25 VA INRUSH AT 24V. FIELD POWER SUPPLY IS NOT REQUIRED.
8. MAKE APPROPRIATE CONNECTIONS TO TB6 AS SHOWN FOR ENERGY MANAGEMENT BOARD OPTIONS. THE CONTACTS FOR OCCUPANCY OVERRIDE, DEMAND LIMIT AND ICE DONE OPTIONS MUST BE RATED FOR DRY CIRCUIT APPLICATION CAPABLE OF HANDLING A 24VAC LOAD UP TO 50 MA.
9. J3 - 24 AND 25 OF EMM BOARD ARE FOR RUN RELAY AND SHUTDOWN RELAY. THE MAXIMUM LOAD ALLOWED FOR THE RUN AND SHUTDOWN RELAY IS 10 VA SEALED, 25 VA INRUSH AT 24V. FIELD POWER SUPPLY IS NOT REQUIRED.
10. 250-OHM ½-WATT RESISTOR IS FIELD-SUPPLIED.

LEGEND:

A - ALARM
PMPI- CHILLED WATER PUMP INTERLOCK
CWP - CHILLED WATER PUMP
EMM - ENERGY MANAGEMENT
SHD R- SHUTDOWN RELAY
RUN R- RUN RELAY
MLV - MINIMUM LOAD VALVE
TB - TERMINAL BLOCK
■ ■ FIELD POWER WIRING
- - FIELD CONTROL WIRING
——— FACTORY INSTALLED WIRING

DUPLEX UNITS	
SIZE	STD UNIT
315A,B 330B	160
330A 345A,B 360B	170
360A 390A,B	190

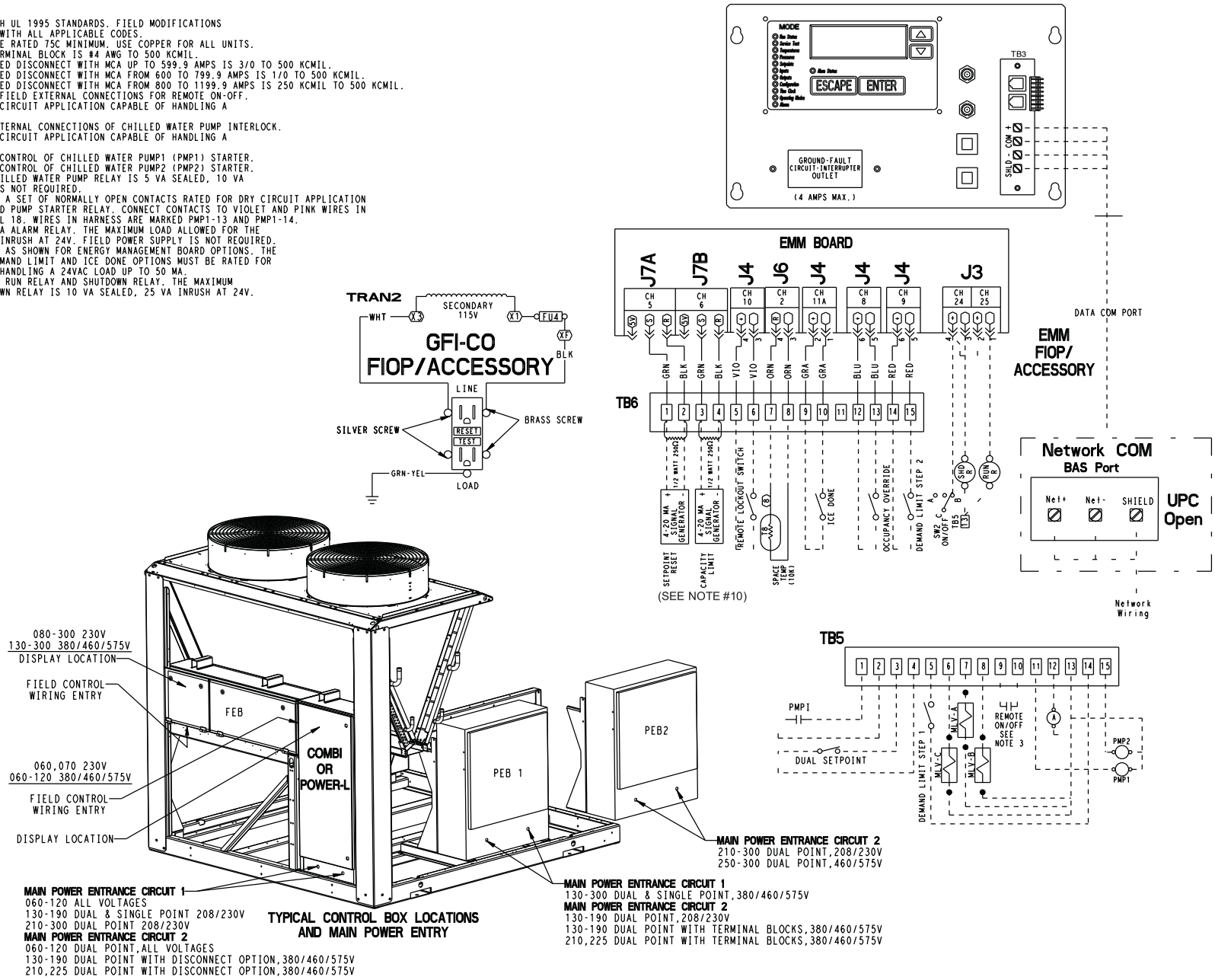

Fig. 58 — Control and Power Wiring Schematic, 30RB060-390

NOTES:

1. FACTORY WIRING IS IN ACCORDANCE WITH UL 1995 STANDARDS. FIELD MODIFICATIONS OR ADDITIONS MUST BE IN COMPLIANCE WITH ALL APPLICABLE CODES.
2. WIRING FOR MAIN FIELD SUPPLY MUST BE RATED 75C MINIMUM. USE COPPER FOR ALL UNITS.
   INCOMING WIRE SIZE RANGE FOR THE TERMINAL BLOCK IS #4 AWG TO 500 KCMIL.
   INCOMING WIRE SIZE RANGE OF NON-FUSED DISCONNECT WITH MCA UP TO 599.9 AMPS IS 3/0 TO 500 KCMIL.
   INCOMING WIRE SIZE RANGE OF NON-FUSED DISCONNECT WITH MCA FROM 600 TO 799.9 AMPS IS 1/0 TO 500 KCMIL.
   INCOMING WIRE SIZE RANGE OF NON-FUSED DISCONNECT WITH MCA FROM 800 TO 1199.9 AMPS IS 250 KCMIL TO 500 KCMIL.
3. TERMINALS 9 AND 10 OF TB5 ARE FOR FIELD EXTERNAL CONNECTIONS FOR REMOTE ON-OFF. THE CONTACTS MUST BE RATED FOR DRY CIRCUIT APPLICATION CAPABLE OF HANDLING A 24VAC LOAD UP TO 50 MA.
4. TERMINALS 1 AND 2 OF TB5 ARE FOR EXTERNAL CONNECTIONS OF CHILLED WATER PUMP INTERLOCK. THE CONTACTS MUST BE RATED FOR DRY CIRCUIT APPLICATION CAPABLE OF HANDLING A 24VAC LOAD UP TO 50 MA.
5. TERMINALS 11 AND 13 OF TB5 ARE FOR CONTROL OF CHILLED WATER PUMP1 (PMP1) STARTER. TERMINALS 13 AND 15 OF TB5 ARE FOR CONTROL OF CHILLED WATER PUMP2 (PMP2) STARTER. THE MAXIMUM LOAD ALLOWED FOR THE CHILLED WATER PUMP RELAY IS 5 VA SEALED, 10 VA INRUSH AT 24V. FIELD POWER SUPPLY IS NOT REQUIRED.
6. FOR CONTROL OF CHILLED WATER PUMPS, A SET OF NORMALLY OPEN CONTACTS RATED FOR DRY CIRCUIT APPLICATION MUST BE SUPPLIED FROM FIELD SUPPLIED PUMP STARTER RELAY. CONNECT CONTACTS TO VIOLET AND PINK WIRES IN HARNESS FROM MAIN BASE BOARD CHANNEL 18. WIRES IN HARNESS ARE MARKED PMP1-13 AND PMP1-14.
7. TERMINALS 12 AND 13 OF TB5 ARE FOR A ALARM RELAY. THE MAXIMUM LOAD ALLOWED FOR THE ALARM RELAY IS 10 VA SEALED, 25 VA INRUSH AT 24V. FIELD POWER SUPPLY IS NOT REQUIRED.
8. MAKE APPROPRIATE CONNECTIONS TO TB6 AS SHOWN FOR ENERGY MANAGEMENT BOARD OPTIONS. THE CONTACTS FOR OCCUPANCY OVERRIDE, DEMAND LIMIT AND ICE DONE OPTIONS MUST BE RATED FOR DRY CIRCUIT APPLICATION CAPABLE OF HANDLING A 24VAC LOAD UP TO 50 MA.
9. J3 - 24 AND 25 OF EMM BOARD ARE FOR RUN RELAY AND SHUTDOWN RELAY. THE MAXIMUM LOAD ALLOWED FOR THE RUN AND SHUTDOWN RELAY IS 10 VA SEALED, 25 VA INRUSH AT 24V. FIELD POWER SUPPLY IS NOT REQUIRED.
10. 250-OHM ½-WATT RESISTOR IS FIELD-SUPPLIED.

LEGEND:

A - ALARM
PMPI- CHILLED WATER PUMP INTERLOCK
CWP - CHILLED WATER PUMP
EMM - ENERGY MANAGEMENT
SHD R- SHUTDOWN RELAY
RUN R- RUN RELAY
MLV - MINIMUM LOAD VALVE
TB - TERMINAL BLOCK
■ ■ FIELD POWER WIRING
– – FIELD CONTROL WIRING
——— FACTORY INSTALLED WIRING

DUPLEX UNITS	
SIZE	STD UNIT
315A,B 330B	160
330A 345A,B 360B	170
360A 390A,B	190

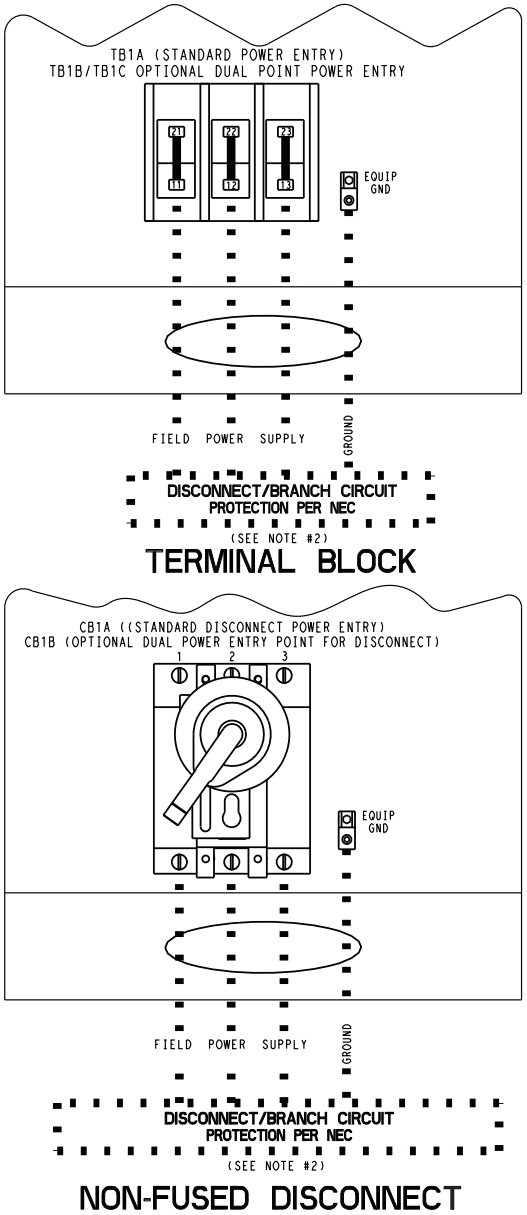

Fig. 58 — Control and Power Wiring Schematic, 30RB060-390 (cont)

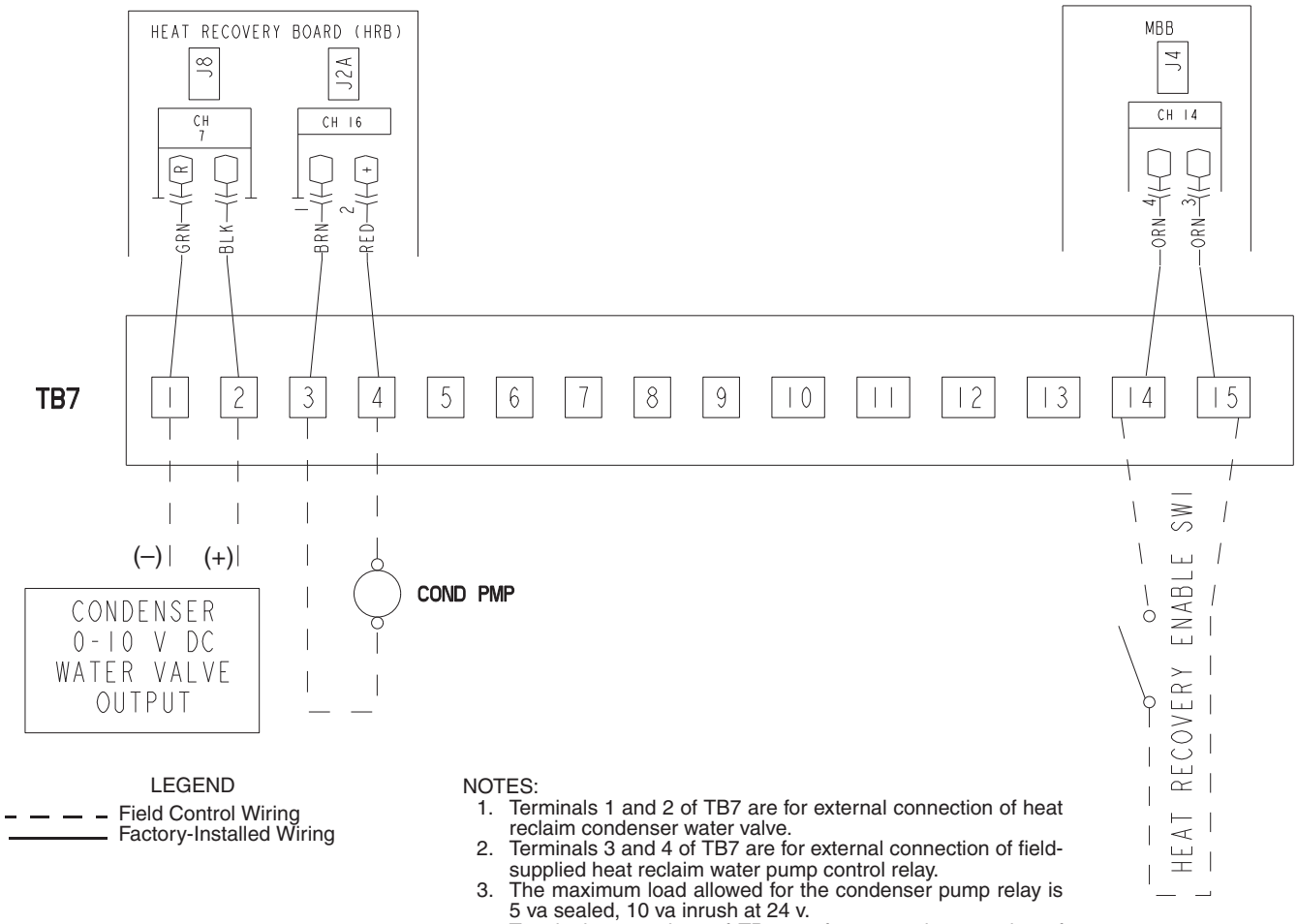

LEGEND

- - - - Field Control Wiring

——— Factory-Installed Wiring

NOTES:

1. Terminals 1 and 2 of TB7 are for external connection of heat reclaim condenser water valve.
2. Terminals 3 and 4 of TB7 are for external connection of field-supplied heat reclaim water pump control relay.
3. The maximum load allowed for the condenser pump relay is 5 va sealed, 10 va inrush at 24 v.
4. Terminals 14 and 15 of TB7 are for external connection of heat reclaim remote enable switch.
5. Terminals 5 through 13 of TB7 are for the connection of factory-installed solenoid valve control wiring.

Fig. 59 — Optional Heat Reclaim Control Typical Field Wiring

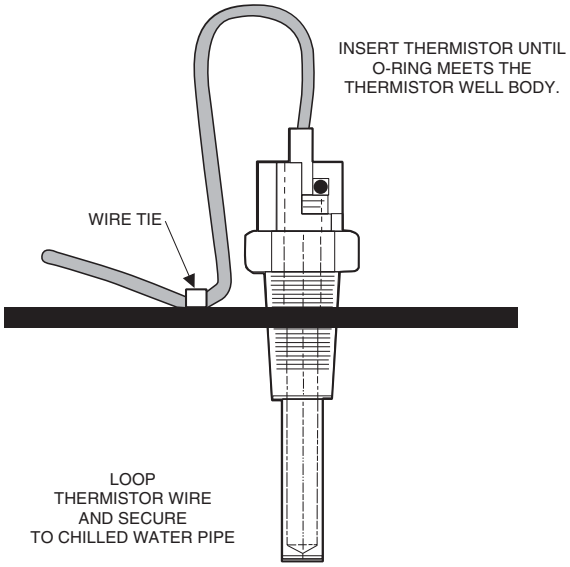

Fig. 60 — Dual Leaving Water Thermistor (Part No. 30RB660036)

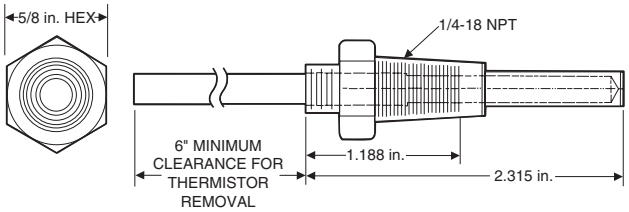

Fig. 61 — Dual Leaving Water Thermistor Well (Part No. 00PPG000008000A)

Table 10A — 30RB060-190 Electrical Data — Single Point Units

UNIT 30RB	UNIT VOLTAGE			NO HYDRONIC PACKAGE				3 HP PUMP, 1750 RPM				5 HP PUMP, 1750 RPM			
	V-Hz (3 Ph)	Supplied		MCA	MOCP	ICF	Rec Fuse Size	MCA	MOCP	ICF	Rec Fuse Size	MCA	MOCP	ICF	Rec Fuse Size
		Min	Max	XL	XL	XL		XL	XL	XL		XL	XL	XL	
060	208/230-60	187	253	291.5	350	682.8	350	300.6	350	693.6	350	306.9	350	700.5	350
	380-60	342	418	150.9	175	362.9	175	156.0	175	368.8	175	159.0	175	372.6	175
	460-60	414	506	127.9	150	302.0	150	132.1	150	306.9	150	135.0	150	310.0	150
	575-60	518	633	102.4	125	244.7	110	105.7	125	248.6	125	107.8	125	251.1	125
070	208/230-60	187	253	334.7	400	777.0	400	343.8	400	787.8	400	350.1	400	794.7	400
	380-60	342	418	175.5	200	428.8	200	180.8	225	434.7	200	183.6	225	438.5	200
	460-60	414	506	147.9	175	355.9	175	152.1	175	360.8	175	155.0	175	363.9	175
	575-60	518	633	119.8	150	287.4	150	123.1	150	291.3	150	125.2	150	293.8	150
080	208/230-60	187	253	366.5	400	757.8	400	—	—	—	—	381.9	450	775.5	450
	380-60	342	418	189.3	225	401.3	200	—	—	—	—	197.4	225	411.0	225
	460-60	414	506	160.6	175	334.7	175	—	—	—	—	167.7	200	342.7	200
	575-60	518	633	128.6	150	270.9	150	—	—	—	—	134.0	150	277.3	150
090	208/230-60	187	253	433.6	500	875.9	500	—	—	—	—	449.0	500	893.6	500
	380-60	342	418	226.9	250	480.3	250	—	—	—	—	235.0	250	490.0	250
	460-60	414	506	191.4	225	399.4	225	—	—	—	—	198.5	225	407.4	225
	575-60	518	633	154.6	175	322.2	175	—	—	—	—	160.0	175	328.6	175
100	208/230-60	187	253	472.0	500	914.3	500	—	—	—	—	487.4	500	932.0	500
	380-60	342	418	248.7	250	502.1	250	—	—	—	—	256.8	300	511.8	300
	460-60	414	506	209.2	250	417.2	225	—	—	—	—	216.3	250	425.2	250
	575-60	518	633	170.0	200	337.6	200	—	—	—	—	175.4	200	344.0	200
110	208/230-60	187	253	508.6	600	950.9	600	—	—	—	—	524.0	600	968.6	600
	380-60	342	418	265.3	300	518.7	300	—	—	—	—	273.4	300	528.4	300
	460-60	414	506	224.1	250	432.1	250	—	—	—	—	231.2	250	440.1	250
	575-60	518	633	180.8	200	348.4	200	—	—	—	—	186.2	200	354.8	200
120	208/230-60	187	253	578.1	600	1020.4	600	—	—	—	—	593.5	600	1038.1	700
	380-60	342	418	304.6	350	538.0	350	—	—	—	—	312.7	350	567.6	350
	460-60	414	506	256.2	300	464.2	300	—	—	—	—	263.3	300	472.2	300
	575-60	518	633	208.2	225	325.8	225	—	—	—	—	213.6	225	382.2	225
130	208/230-60	187	253	626.7	700	1068.9	700	—	—	—	—	642.1	700	1086.6	700
	380-60	342	418	327.7	350	581.1	350	—	—	—	—	335.8	350	590.8	350
	460-60	414	506	276.5	300	484.5	300	—	—	—	—	283.6	300	492.5	300
	575-60	518	633	223.3	250	391.0	250	—	—	—	—	228.7	250	397.4	250
150	208/230-60	187	253	684.3	700	1126.5	700	—	—	—	—	699.7	700	1144.2	800
	380-60	342	418	360.4	400	613.8	400	—	—	—	—	368.5	400	623.5	400
	460-60	414	506	303.2	350	511.2	350	—	—	—	—	310.3	350	519.2	350
	575-60	518	633	246.4	250	414.1	250	—	—	—	—	251.8	300	420.5	300
160	208/230-60	187	253	744.8	800	1187.0	800	—	—	—	—	760.2	800	1204.7	800
	380-60	342	418	390.1	400	643.5	400	—	—	—	—	398.2	400	653.2	400
	460-60	414	506	328.9	350	536.9	350	—	—	—	—	336.0	350	544.9	350
	575-60	518	633	265.9	300	433.5	300	—	—	—	—	271.3	300	439.9	300
170	208/230-60	187	253	802.4	1000	1244.6	1000	—	—	—	—	817.8	1000	1262.3	1000
	380-60	342	418	422.8	450	676.2	450	—	—	—	—	430.9	450	685.9	450
	460-60	414	506	355.6	400	563.6	400	—	—	—	—	362.7	400	571.6	400
	575-60	518	633	289.0	300	456.6	300	—	—	—	—	294.4	300	463.0	300
190	208/230-60	187	253	920.5	1000	1362.7	1000	—	—	—	—	935.9	1000	1380.4	1000
	380-60	342	418	485.2	500	738.5	500	—	—	—	—	493.3	500	748.2	500
	460-60	414	506	408.0	450	616.0	450	—	—	—	—	415.1	450	624.0	450
	575-60	518	633	331.5	350	499.1	350	—	—	—	—	336.9	350	505.5	350

LEGEND

AWG — American Wire Gage
ICF — Instantaneous Current Flow
MCA — Minimum Circuit Amps
MOCP — Maximum Overcurrent Protection
XL — Across-the-Line Start

NOTES:

1. Units are suitable for use on electrical systems where voltage supplied to the unit terminals is not below or above the listed minimum and maximum limits. Maximum allowable phase imbalance is: voltage, 2%; amps 10%.
2. All units or modules have single point primary power connection. (Each unit or module requires its own power supply.) Main power must be supplied from a field-supplied disconnect.
3. Cooler heater is wired into the control circuit so it is always operable as long as the power supply disconnect is on, even if any safety device is open.
4. For MCA that is less than or equal to 380 amps, 3 conductors are required.
   For MCA between 381-760 amps, 6 conductors are required.
   For MCA between 761-1140 amps, 9 conductors are required.
   For MCA between 1141-1520 amps, 12 conductors are required.
   Calculation of conductors required is based on 75 C copper wire.
5. Wiring for main field supply must be rated 75 C minimum. Use copper for all units.
   a. Incoming wire size range for the terminal block is no. 4 AWG to 500 kcmil.
   b. Incoming wire size range of non-fused disconnect with MCA up to 599.9 amps is 3/0 to 500 kcmil.
   c. Incoming wire size range of non-fused disconnect with MCA from 600 to 799.9 amps is 1/0 to 500 kcmil.
   d. Incoming wire size range of non-fused disconnect with MCA from 800 to 1199.9 amps is 250 kcmil to 500 kcmil.
6. Hydronic pump packages are not available as a factory-installed option for units 30RB210-390.
7. Power draw includes both crankcase heaters and cooler heaters (where used). Each compressor has a crankcase heater which draws 56 watts of power. Units ordered with the cooler heater option have 1 (060-150) or 2 (160-300) cooler heaters, 825 watts each.

208/230
460
575 v only

Table 10A — 30RB060-190 Electrical Data — Single Point Units (cont)

UNIT 30RB	UNIT VOLTAGE			7.5 HP PUMP, 1750/3450 RPM				10 HP PUMP, 3450 RPM				15 HP PUMP, 3450 RPM			
	V-Hz (3 Ph)	Supplied		MCA	MOCP	ICF	Rec Fuse Size	MCA	MOCP	ICF	Rec Fuse Size	MCA	MOCP	ICF	Rec Fuse Size
		Min	Max	XL	XL	XL		XL	XL	XL		XL	XL	XL	
060	208/230-60	187	253	313.5	350	708.5	350	316.5	350	716.4	350	—	—	—	—
	380-60	342	418	163.2	200	376.9	175	164.9	200	381.3	175	—	—	—	—
	460-60	414	506	138.0	150	313.6	150	139.4	150	317.2	150	—	—	—	—
	575-60	518	633	110.5	125	254.0	125	111.6	125	256.9	125	—	—	—	—
070	208/230-60	187	253	356.7	450	802.7	400	359.7	450	810.6	400	—	—	—	—
	380-60	342	418	187.8	225	442.8	225	189.5	225	447.2	225	—	—	—	—
	460-60	414	506	158.0	175	367.5	175	159.4	200	371.1	175	—	—	—	—
	575-60	518	633	127.9	150	296.7	150	129.0	150	299.6	150	—	—	—	—
080	208/230-60	187	253	388.5	450	783.5	450	391.5	450	791.4	450	403.2	450	807.6	450
	380-60	342	418	201.6	225	415.3	225	203.3	225	419.7	225	210.3	225	428.5	225
	460-60	414	506	170.7	200	346.3	200	172.1	200	349.9	200	177.6	200	357.2	200
	575-60	518	633	136.7	150	280.2	150	137.8	150	283.1	150	142.6	150	288.9	150
090	208/230-60	187	253	455.6	500	901.6	500	458.6	500	909.5	500	470.3	500	925.7	500
	380-60	342	418	239.2	250	494.3	250	240.9	250	498.7	250	247.9	250	507.5	300
	460-60	414	506	201.5	225	411.0	225	202.9	225	414.6	225	208.4	250	421.9	225
	575-60	518	633	162.7	175	331.5	175	163.8	175	334.4	175	168.6	200	340.2	200
100	208/230-60	187	253	494.0	500	940.0	500	497.0	500	947.9	600	508.7	600	964.1	600
	380-60	342	418	261.0	300	516.1	300	262.7	300	520.5	300	269.7	300	529.3	300
	460-60	414	506	219.3	250	428.8	250	220.7	250	432.4	250	226.2	250	439.7	250
	575-60	518	633	178.1	200	346.9	200	179.2	200	349.8	200	184.0	200	355.6	200
110	208/230-60	187	253	530.6	600	976.6	600	533.6	600	984.5	600	545.3	600	1000.7	600
	380-60	342	418	277.6	300	532.7	300	279.3	300	537.1	300	286.3	300	545.9	300
	460-60	414	506	234.2	250	443.7	250	235.6	250	447.3	250	241.1	250	454.6	250
	575-60	518	633	188.9	200	357.7	200	190.0	200	360.6	200	194.8	225	366.4	225
120	208/230-60	187	253	600.1	700	1046.1	700	603.1	700	1054.0	700	614.8	700	1070.2	700
	380-60	342	418	316.9	350	572.0	350	318.6	350	576.4	350	325.6	350	585.2	350
	460-60	414	506	266.3	300	425.8	300	267.7	300	479.4	300	273.2	300	486.7	300
	575-60	518	633	216.3	225	385.1	250	217.4	250	388.0	250	222.2	250	393.8	250
130	208/230-60	187	253	648.7	700	1094.6	700	651.7	700	1102.5	700	663.4	700	1118.7	700
	380-60	342	418	340.0	350	595.1	350	341.7	350	599.5	350	348.7	350	608.3	400
	460-60	414	506	286.6	300	496.1	300	288.0	300	499.7	300	293.5	300	507.0	300
	575-60	518	633	231.4	250	400.3	250	232.5	250	403.2	250	237.3	250	409.0	250
150	208/230-60	187	253	706.3	800	1152.2	800	709.3	800	1160.1	800	721.0	800	1176.3	800
	380-60	342	418	372.7	400	627.8	400	374.4	400	632.2	400	381.4	400	641.0	400
	460-60	414	506	313.3	350	522.8	350	314.7	350	526.4	350	320.2	350	533.7	350
	575-60	518	633	254.5	300	423.4	300	255.6	300	426.3	300	260.4	300	432.1	300
160	208/230-60	187	253	766.8	800	1212.7	800	769.8	800	1220.6	800	781.5	800	1236.8	800
	380-60	342	418	402.4	450	657.5	450	404.1	450	661.9	450	411.1	450	670.7	450
	460-60	414	506	339.0	350	548.5	350	340.4	350	552.1	350	345.9	350	559.4	400
	575-60	518	633	274.0	300	442.8	300	275.1	300	445.7	300	279.9	300	451.5	300
170	208/230-60	187	253	824.4	1000	1270.3	1000	827.4	1000	1278.2	1000	839.1	1000	1294.4	1000
	380-60	342	418	435.1	450	690.2	450	436.8	450	694.6	450	443.8	450	703.4	500
	460-60	414	506	365.7	400	575.2	400	367.1	400	578.8	400	372.6	400	586.1	400
	575-60	518	633	297.1	300	465.9	300	298.2	300	468.8	350	303.0	350	474.6	350
190	208/230-60	187	253	942.5	1000	1388.4	1000	945.5	1000	1396.3	1000	957.2	1000	1412.5	1000
	380-60	342	418	497.5	500	752.5	500	499.2	500	756.9	600	506.2	600	765.7	600
	460-60	414	506	418.1	450	627.6	450	419.5	450	631.2	450	425.0	450	638.5	450
	575-60	518	633	339.6	350	508.4	350	340.7	350	511.3	350	345.5	350	517.1	350

LEGEND

AWG — American Wire Gage
ICF — Instantaneous Current Flow
MCA — Minimum Circuit Amps
MOCP — Maximum Overcurrent Protection
XL — Across-the-Line Start

NOTES:

1. Units are suitable for use on electrical systems where voltage supplied to the unit terminals is not below or above the listed minimum and maximum limits. Maximum allowable phase imbalance is: voltage, 2%; amps 10%.
2. All units and modules have single point primary power connection. (Each unit or module requires its own power supply.) Main power must be supplied from a field-supplied disconnect.
3. Cooler heater is wired into the control circuit so it is always operable as long as the power supply disconnect is on, even if any safety device is open.
4. For MCA that is less than or equal to 380 amps, 3 conductors are required.
   For MCA between 381-760 amps, 6 conductors are required.
   For MCA between 761-1140 amps, 9 conductors are required.
   For MCA between 1141-1520 amps, 12 conductors are required.
   Calculation of conductors required is based on 75 C copper wire.
5. Wiring for main field supply must be rated 75 C minimum. Use copper for all units.
   a. Incoming wire size range for the terminal block is no. 4 AWG to 500 kcmil.
   b. Incoming wire size range of non-fused disconnect with MCA up to 599.9 amps is 3/0 to 500 kcmil.
   c. Incoming wire size range of non-fused disconnect with MCA from 600 to 799.9 amps is 1/0 to 500 kcmil.
   d. Incoming wire size range of non-fused disconnect with MCA from 800 to 1199.9 amps is 250 kcmil to 500 kcmil.
6. Hydronic pump packages are not available as a factory-installed option for units 30RB210-390.
7. Power draw includes both crankcase heaters and cooler heaters (where used). Each compressor has a crankcase heater which draws 56 watts of power. Units ordered with the cooler heater option have 1 (060-150) or 2 (160-300) cooler heaters, 825 watts each.

208/230
460
575 v only

Table 10B — 30RB210-390 Electrical Data — Single Point Units

UNIT 30RB	UNIT VOLTAGE			NO HYDRONIC PACKAGE				3 HP PUMP, 1750 RPM				5 HP PUMP, 1750 RPM			
	V-Hz (3 Ph)	Supplied		MCA	MOCP	ICF	Rec Fuse Size	MCA	MOCP	ICF	Rec Fuse Size	MCA	MOCP	ICF	Rec Fuse Size
		Min	Max	XL	XL	XL		XL	XL	XL		XL	XL	XL	
210	208/230-60	187	253	—	—	—	—	—	—	—	—	—	—	—	—
	380-60	342	418	501.8	600	755.1	600	—	—	—	—	—	—	—	—
	460-60	414	506	422.9	450	630.9	450	—	—	—	—	—	—	—	—
	575-60	518	633	342.3	350	509.9	350	—	—	—	—	—	—	—	—
225	208/230-60	187	253	—	—	—	—	—	—	—	—	—	—	—	—
	380-60	342	418	534.5	600	787.8	600	—	—	—	—	—	—	—	—
	460-60	414	506	449.6	450	657.6	450	—	—	—	—	—	—	—	—
	575-60	518	633	365.4	400	533.0	400	—	—	—	—	—	—	—	—
250	208/230-60	187	253	—	—	—	—	—	—	—	—	—	—	—	—
	380-60	342	418	596.8	600	850.2	600	—	—	—	—	—	—	—	—
	460-60	414	506	502.0	600	710.0	600	—	—	—	—	—	—	—	—
	575-60	518	633	408.0	450	575.6	450	—	—	—	—	—	—	—	—
275	208/230-60	187	253	—	—	—	—	—	—	—	—	—	—	—	—
	380-60	342	418	659.2	700	912.6	700	—	—	—	—	—	—	—	—
	460-60	414	506	554.4	600	762.4	600	—	—	—	—	—	—	—	—
	575-60	518	633	450.5	500	618.1	500	—	—	—	—	—	—	—	—
300	208/230-60	187	253	—	—	—	—	—	—	—	—	—	—	—	—
	380-60	342	418	721.6	800	975.0	800	—	—	—	—	—	—	—	—
	460-60	414	506	606.8	700	814.8	700	—	—	—	—	—	—	—	—
	575-60	518	633	493.0	500	660.7	500	—	—	—	—	—	—	—	—
315A	208/230-60	187	253	744.8	800	1187.0	800	—	—	—	—	—	—	—	—
	380-60	342	418	390.1	400	643.5	400	—	—	—	—	—	—	—	—
	460-60	414	506	328.9	350	536.9	350	—	—	—	—	—	—	—	—
	575-60	518	633	265.9	300	433.5	300	—	—	—	—	—	—	—	—
315B	208/230-60	187	253	744.8	800	1187.0	800	—	—	—	—	—	—	—	—
	380-60	342	418	390.1	400	643.5	400	—	—	—	—	—	—	—	—
	460-60	414	506	328.9	350	536.9	350	—	—	—	—	—	—	—	—
	575-60	518	633	265.9	300	433.5	300	—	—	—	—	—	—	—	—
330A	208/230-60	187	253	802.4	1000	1244.6	1000	—	—	—	—	—	—	—	—
	380-60	342	418	422.8	450	676.2	450	—	—	—	—	—	—	—	—
	460-60	414	506	355.6	400	563.6	400	—	—	—	—	—	—	—	—
	575-60	518	633	289.0	300	456.6	300	—	—	—	—	—	—	—	—
330B	208/230-60	187	253	744.8	800	1187.0	800	—	—	—	—	—	—	—	—
	380-60	342	418	390.1	400	643.5	400	—	—	—	—	—	—	—	—
	460-60	414	506	328.9	350	536.9	350	—	—	—	—	—	—	—	—
	575-60	518	633	265.9	300	433.5	300	—	—	—	—	—	—	—	—
345A	208/230-60	187	253	802.4	1000	1244.6	1000	—	—	—	—	—	—	—	—
	380-60	342	418	422.8	450	676.2	450	—	—	—	—	—	—	—	—
	460-60	414	506	355.6	400	563.6	400	—	—	—	—	—	—	—	—
	575-60	518	633	289.0	300	456.6	300	—	—	—	—	—	—	—	—
345B	208/230-60	187	253	802.4	1000	1244.6	1000	—	—	—	—	—	—	—	—
	380-60	342	418	422.8	450	676.2	450	—	—	—	—	—	—	—	—
	460-60	414	506	355.6	400	563.6	400	—	—	—	—	—	—	—	—
	575-60	518	633	289.0	300	456.6	300	—	—	—	—	—	—	—	—
360A	208/230-60	187	253	920.5	1000	1362.7	1000	—	—	—	—	—	—	—	—
	380-60	342	418	485.2	500	738.5	500	—	—	—	—	—	—	—	—
	460-60	414	506	408.0	450	616.0	450	—	—	—	—	—	—	—	—
	575-60	518	633	331.5	350	499.1	350	—	—	—	—	—	—	—	—
360B	208/230-60	187	253	802.4	1000	1244.6	1000	—	—	—	—	—	—	—	—
	380-60	342	418	422.8	450	676.2	450	—	—	—	—	—	—	—	—
	460-60	414	506	355.6	400	563.6	400	—	—	—	—	—	—	—	—
	575-60	518	633	289.0	300	456.6	300	—	—	—	—	—	—	—	—
390A	208/230-60	187	253	920.5	1000	1362.7	1000	—	—	—	—	—	—	—	—
	380-60	342	418	485.2	500	738.5	500	—	—	—	—	—	—	—	—
	460-60	414	506	408.0	450	616.0	450	—	—	—	—	—	—	—	—
	575-60	518	633	331.5	350	499.1	350	—	—	—	—	—	—	—	—
390B	208/230-60	187	253	920.5	1000	1362.7	1000	—	—	—	—	—	—	—	—
	380-60	342	418	485.2	500	738.5	500	—	—	—	—	—	—	—	—
	460-60	414	506	408.0	450	616.0	450	—	—	—	—	—	—	—	—
	575-60	518	633	331.5	350	499.1	350	—	—	—	—	—	—	—	—

LEGEND

AWG — American Wire Gage
ICF — Instantaneous Current Flow
MCA — Minimum Circuit Amps
MOCP — Maximum Overcurrent Protection
XL — Across-the-Line Start

NOTES:

1. Units are suitable for use on electrical systems where voltage supplied to the unit terminals is not below or above the listed minimum and maximum limits. Maximum allowable phase imbalance is: voltage, 2%; amps 10%.
2. All units or modules have single point primary power connection. (Each unit or module requires its own power supply.) Main power must be supplied from a field-supplied disconnect.
3. Cooler heater is wired into the control circuit so it is always operable as long as the power supply disconnect is on, even if any safety device is open.
4. For MCA that is less than or equal to 380 amps, 3 conductors are required.
   For MCA between 381-760 amps, 6 conductors are required.
   For MCA between 761-1140 amps, 9 conductors are required.
   For MCA between 1141-1520 amps, 12 conductors are required.
   Calculation of conductors required is based on 75 C copper wire.
5. Wiring for main field supply must be rated 75 C minimum. Use copper for all units.
   a. Incoming wire size range for the terminal block is no. 4 AWG to 500 kcmil.
   b. Incoming wire size range of non-fused disconnect with MCA up to 599.9 amps is 3/0 to 500 kcmil.
   c. Incoming wire size range of non-fused disconnect with MCA from 600 to 799.9 amps is 1/0 to 500 kcmil.
   d. Incoming wire size range of non-fused disconnect with MCA from 800 to 1199.9 amps is 250 kcmil to 500 kcmil.
6. Hydronic pump packages are not available as a factory-installed option for units 30RB210-390.
7. Power draw includes both crankcase heaters and cooler heaters (where used). Each compressor has a crankcase heater which draws 56 watts of power. Units ordered with the cooler heater option have 1 (060-150) or 2 (160-300) cooler heaters, 825 watts each.

208/230
460
575 v only

Table 11A — 30RB060-190 Electrical Data — Dual Point Units

30RB UNIT SIZE	UNIT VOLTAGE			NO HYDRONIC PACKAGE				3 HP PUMP, 1750 RPM				5 HP PUMP, 1750 RPM			
	V-Hz (3 Ph)	Supplied		MCA	MOCP	ICF	Rec Fuse Size	MCA	MOCP	ICF	Rec Fuse Size	MCA	MOCP	ICF	Rec Fuse Size
		Min	Max	XL	XL	XL		XL	XL	XL		XL	XL	XL	
060	208/230-60	187	253	168.8/141.5	225/200	560.0/532.8	200/175	177.9/141.5	250/200	570.8/532.8	200/175	184.2/141.5	250/200	577.7/532.8	225/175
	380-60	342	418	86.4/ 74.1	110/110	298.4/286.1	100/ 90	91.5/ 74.1	125/110	304.3/286.1	110/ 90	94.5/ 74.1	125/110	308.1/286.1	110/ 90
	460-60	414	506	73.6/ 62.5	100/ 90	247.7/236.6	90/ 80	77.8/ 62.5	110/ 90	252.6/236.6	90/ 80	80.7/ 62.5	110/ 90	255.7/236.6	90/ 80
	575-60	518	633	59.0/ 50.0	80/ 70	201.2/192.3	70/ 60	62.3/ 50.0	80/ 70	205.1/192.3	70/ 60	64.4/ 50.0	90/ 70	207.6/192.3	80/ 60
070	208/230-60	187	253	212.0/141.5	300/200	654.2/532.8	250/175	221.1/141.5	300/200	665.0/532.8	250/175	227.4/141.5	300/200	671.9/532.8	300/175
	380-60	342	418	110.9/ 74.1	150/110	364.3/286.1	125/ 90	116.0/ 74.1	150/110	370.2/286.1	150/ 90	119.0/ 74.1	150/110	374.0/286.1	150/ 90
	460-60	414	506	93.6/ 62.5	125/ 90	301.6/236.6	110/ 80	97.8/ 62.5	125/ 90	306.5/236.6	110/ 80	100.7/ 62.5	125/ 90	309.6/236.6	125/ 80
	575-60	518	633	76.3/ 50.0	110/ 70	243.9/192.3	90/ 60	79.6/ 50.0	110/ 70	247.8/192.3	90/ 60	81.7/ 50.0	110/ 70	250.3/192.3	100/ 60
080	208/230-60	187	253	216.5/168.8	250/225	607.8/560.0	250/200	—	—	—	—	231.9/168.8	300/225	625.5/560.0	300/200
	380-60	342	418	112.5/ 86.4	150/110	324.5/298.4	125/100	—	—	—	—	120.6/ 86.4	150/110	334.2/298.4	150/100
	460-60	414	506	95.2/ 73.6	125/100	269.3/247.7	110/ 90	—	—	—	—	102.3/ 73.6	125/100	277.3/247.7	125/ 90
	575-60	518	633	76.2/ 59.0	100/ 80	218.5/201.2	90/ 70	—	—	—	—	81.6/ 59.0	100/ 80	224.9/201.2	90/ 70
090	208/230-60	187	253	283.6/168.8	350/225	725.9/560.0	350/200	—	—	—	—	299.0/168.8	350/225	743.5/560.0	350/200
	380-60	342	418	150.1/ 86.4	175/110	403.5/298.4	175/100	—	—	—	—	158.2/ 86.4	200/110	413.2/298.4	175/100
	460-60	414	506	126.0/ 73.6	150/100	334.0/247.7	150/ 90	—	—	—	—	133.1/ 73.6	150/100	342.0/247.7	150/ 90
	575-60	518	633	102.2/ 59.0	125/ 80	269.8/201.2	125/ 70	—	—	—	—	107.6/ 59.0	125/ 80	276.2/201.2	125/ 70
100	208/230-60	187	253	283.6/212.0	350/300	725.9/654.2	350/250	—	—	—	—	299.0/212.0	350/300	743.5/654.2	350/250
	380-60	342	418	150.1/110.9	175/150	403.5/364.3	175/125	—	—	—	—	158.2/110.9	200/150	413.2/364.3	175/125
	460-60	414	506	126.0/ 93.6	150/125	334.0/301.6	150/110	—	—	—	—	133.1/ 93.6	150/125	342.0/301.6	150/110
	575-60	518	633	102.2/ 76.3	125/110	269.8/243.9	125/ 90	—	—	—	—	107.6/ 76.3	125/110	276.2/243.9	125/ 90
110	208/230-60	187	253	283.6/243.8	350/300	725.9/635.0	350/300	—	—	—	—	299.0/243.8	350/300	743.5/635.0	350/300
	380-60	342	418	150.1/124.8	175/150	403.5/336.8	175/150	—	—	—	—	158.2/124.8	200/150	413.2/336.8	175/150
	460-60	414	506	126.0/106.3	150/125	334.0/280.4	150/125	—	—	—	—	133.1/106.3	150/125	342.0/280.4	150/125
	575-60	518	633	102.2/ 85.2	125/110	269.8/227.4	125/100	—	—	—	—	107.6/ 85.2	125/110	276.2/227.4	125/100
120	208/230-60	187	253	295.5/306.2	350/400	737.8/748.4	350/350	—	—	—	—	310.9/306.2	400/400	755.5/748.4	350/350
	380-60	342	418	156.7/160.2	200/200	410.1/413.6	175/175	—	—	—	—	164.8/160.2	200/200	419.7/413.6	200/175
	460-60	414	506	131.4/135.2	150/175	339.4/343.2	150/150	—	—	—	—	138.5/135.2	175/175	347.4/343.2	150/150
	575-60	518	633	106.5/110.2	125/125	274.1/277.8	125/125	—	—	—	—	111.9/110.2	125/125	280.5/277.8	125/125
130	208/230-60	187	253	401.7/243.8	450/300	843.9/635.0	450/300	—	—	—	—	417.1/243.8	500/300	861.6/635.0	450/300
	380-60	342	418	212.5/124.8	250/150	465.9/336.8	225/150	—	—	—	—	220.6/124.8	250/150	475.6/336.8	250/150
	460-60	414	506	178.4/106.3	200/125	386.4/280.4	200/125	—	—	—	—	185.5/106.3	225/125	394.4/280.4	200/125
	575-60	518	633	144.7/ 85.2	175/110	312.4/227.4	175/100	—	—	—	—	150.1/ 85.2	175/110	318.8/227.4	175/100
150	208/230-60	187	253	401.7/306.2	450/400	843.9/748.4	450/350	—	—	—	—	417.1/306.2	500/400	861.6/748.4	450/350
	380-60	342	418	212.5/160.2	250/200	465.9/413.6	225/175	—	—	—	—	220.6/160.2	250/200	475.6/413.6	250/175
	460-60	414	506	178.4/135.2	200/175	386.4/343.2	200/150	—	—	—	—	185.5/135.2	225/175	394.4/343.2	200/150
	575-60	518	633	144.7/110.2	175/125	312.4/277.8	175/125	—	—	—	—	150.1/110.2	175/125	318.8/277.8	175/125
160	208/230-60	187	253	519.8/243.8	600/300	962.0/635.0	600/300	—	—	—	—	535.2/243.8	600/300	979.7/635.0	600/300
	380-60	342	418	274.9/124.8	300/150	528.3/336.8	300/150	—	—	—	—	283.0/124.8	300/150	538.0/336.8	300/150
	460-60	414	506	230.8/106.3	250/125	438.8/280.4	250/125	—	—	—	—	237.9/106.3	250/125	446.8/280.4	250/125
	575-60	518	633	187.3/ 85.2	200/110	354.9/227.4	200/100	—	—	—	—	192.7/ 85.2	225/110	361.3/227.4	225/100
170	208/230-60	187	253	519.8/306.2	600/400	962.0/748.4	600/350	—	—	—	—	535.2/306.2	600/400	979.7/748.4	600/350
	380-60	342	418	274.9/160.2	300/200	528.3/413.6	300/175	—	—	—	—	283.0/160.2	300/200	538.0/413.6	300/175
	460-60	414	506	230.8/135.2	250/175	438.8/343.2	250/150	—	—	—	—	237.9/135.2	250/175	446.8/343.2	250/150
	575-60	518	633	187.3/110.2	200/125	354.9/277.8	200/125	—	—	—	—	192.7/110.2	225/125	361.3/277.8	225/125
190	208/230-60	187	253	543.7/400.4	600/450	985.9/842.6	600/450	—	—	—	—	559.1/400.4	600/450	1003.6/842.6	600/450
	380-60	342	418	288.0/209.5	300/250	541.3/462.9	300/225	—	—	—	—	296.1/209.5	300/250	551.0/462.9	300/225
	460-60	414	506	241.6/176.8	250/200	449.6/384.8	250/200	—	—	—	—	248.7/176.8	250/200	457.6/384.8	250/200
	575-60	518	633	195.9/144.1	225/175	363.5/311.7	225/175	—	—	—	—	201.3/144.1	225/175	369.9/311.7	225/175

LEGEND

AWG — American Wire Gage
ICF — Instantaneous Current Flow (Ckt1/Ckt2)
MCA — Minimum Circuit Amps (Ckt1/Ckt2)
MOCP — Maximum Overcurrent Protection (Ckt1/Ckt2)
XL — Across-the-Line Start

NOTES:

1. Units are suitable for use on electrical systems where voltage supplied to the unit terminals is not below or above the listed minimum and maximum limits. Maximum allowable phase imbalance is: voltage, 2%; amps 10%.
2. Control power is derived from main power. No separate control power connection is required.
3. Cooler heater is wired into the control circuit so it is always operable as long as the power supply disconnect is on, even if any safety device is open.
4. For MCA that is less than or equal to 380 amps, 3 conductors are required.
   For MCA between 381-760 amps, 6 conductors are required.
   For MCA between 761-1140 amps, 9 conductors are required.
   For MCA between 1141-1520 amps, 12 conductors are required.
   Calculation of conductors required is based on 75 C copper wire.
5. Wiring for main field supply must be rated 75 C minimum. Use copper for all units.
   a. Incoming wire size range for the terminal block is no.4 AWG to 500 kcmil.
   b. Incoming wire size range of non-fused disconnect with MCA up to 599.9 amps is 3/0 to 500 kcmil.
   c. Incoming wire size range of non-fused disconnect with MCA from 600 to 799.9 amps is 1/0 to 500 kcmil.
   d. Incoming wire size range of non-fused disconnect with MCA from 800 to 1199.9 amps is 250 kcmil to 500 kcmil.
6. Hydronic pump packages are not available as a factory-installed option for units 30RB210-390.
7. Power draw includes both crankcase heaters and cooler heaters (where used). Each compressor has a crankcase heater which draws 56 watts of power. Units ordered with the cooler heater option have 1 (060-150) or 2 (160-300) cooler heaters, 825 watts each.

208/230
460
575 v only

Table 11A — 30RB060-190 Electrical Data — Dual Point Units (cont)

30RB UNIT SIZE	UNIT VOLTAGE			7.5 HP PUMP, 1750/3450 RPM				10 HP PUMP, 3450 RPM				15 HP PUMP, 3450 RPM			
	V-Hz (3 Ph)	Supplied		MCA	MOCP	ICF	Rec Fuse Size	MCA	MOCP	ICF	Rec Fuse Size	MCA	MOCP	ICF	Rec Fuse Size
		Min	Max	XL	XL	XL		XL	XL	XL		XL	XL	XL	
060	208/230-60	187	253	190.8/141.5	250/200	585.7/532.8	225/175	193.8/141.5	250/200	593.6/532.8	225/175	—	—	—	—
	380-60	342	418	98.7/ 74.1	125/110	312.4/286.1	110/ 90	100.4/ 74.1	125/110	316.8/286.1	110/ 90	—	—	—	—
	460-60	414	506	83.7/ 62.5	110/ 90	259.3/236.6	100/ 80	85.1/ 62.5	110/ 90	262.9/236.6	100/ 80	—	—	—	—
	575-60	518	633	67.1/ 50.0	90/ 70	210.5/192.3	80/ 60	68.2/ 50.0	90/ 70	213.4/192.3	80/ 60	—	—	—	—
070	208/230-60	187	253	234.0/141.5	300/200	679.9/532.8	300/175	237.0/141.5	300/200	687.8/532.8	300/175	—	—	—	—
	380-60	342	418	123.2/ 74.1	150/110	378.3/286.1	150/ 90	124.9/ 74.1	150/110	382.7/286.1	150/ 90	—	—	—	—
	460-60	414	506	103.7/ 62.5	125/ 90	313.2/236.6	125/ 80	105.1/ 62.5	125/ 90	316.8/236.6	125/ 80	—	—	—	—
	575-60	518	633	84.4/ 50.0	110/ 70	253.2/192.3	100/ 60	85.5/ 50.0	110/ 70	256.1/192.3	100/ 60	—	—	—	—
080	208/230-60	187	253	238.5/168.8	300/225	633.4/560.0	300/200	241.5/168.8	300/225	641.4/560.0	300/200	253.2/168.8	300/225	657.5/560.0	300/200
	380-60	342	418	124.8/ 86.4	150/110	338.6/298.4	150/100	126.5/ 86.4	150/110	342.9/298.4	150/100	133.5/ 86.4	150/110	351.8/298.4	150/100
	460-60	414	506	105.3/ 73.6	125/100	280.9/247.7	125/ 90	106.7/ 73.6	125/100	284.5/247.7	125/ 90	112.2/ 73.6	125/100	291.8/247.7	125/ 90
	575-60	518	633	84.3/ 59.0	110/ 80	227.8/201.2	100/ 70	85.4/ 59.0	110/ 80	230.6/201.2	100/ 70	90.2/ 59.0	110/ 80	236.5/201.2	100/ 70
090	208/230-60	187	253	305.6/168.8	350/225	751.5/560.0	350/200	308.6/168.8	400/225	759.5/560.0	350/200	320.3/168.8	400/225	775.6/560.0	350/200
	380-60	342	418	162.4/ 86.4	200/110	417.6/298.4	175/100	164.1/ 86.4	200/110	421.9/298.4	200/100	171.1/ 86.4	200/110	430.8/298.4	200/100
	460-60	414	506	136.1/ 73.6	175/100	345.6/247.7	150/ 90	137.5/ 73.6	175/100	349.2/247.7	150/ 90	143.0/ 73.6	175/100	356.5/247.7	175/ 90
	575-60	518	633	110.3/ 59.0	125/ 80	279.1/201.2	125/ 70	111.4/ 59.0	125/ 80	282.0/201.2	125/ 70	116.2/ 59.0	150/ 80	287.8/201.2	125/ 70
100	208/230-60	187	253	305.6/212.0	350/300	751.5/654.2	350/250	308.6/212.0	400/300	759.5/654.2	350/250	320.3/212.0	400/300	775.6/654.2	350/250
	380-60	342	418	162.4/110.9	200/150	417.6/364.3	175/125	164.1/110.9	200/150	421.9/364.3	200/125	171.1/110.9	200/150	430.8/364.3	200/125
	460-60	414	506	136.1/ 93.6	175/125	345.6/301.6	150/110	137.5/ 93.6	175/125	349.2/301.6	150/110	143.0/ 93.6	175/125	356.5/301.6	175/110
	575-60	518	633	110.3/ 76.3	125/110	279.1/243.9	125/ 90	111.4/ 76.3	125/110	282.0/243.9	125/ 90	116.2/ 76.3	150/110	287.8/243.9	125/ 90
110	208/230-60	187	253	305.6/243.8	350/300	751.5/635.0	350/300	308.6/243.8	400/300	759.5/635.0	350/300	320.3/243.8	400/300	775.6/635.0	350/300
	380-60	342	418	162.4/124.8	200/150	417.6/336.8	175/150	164.1/124.8	200/150	421.9/336.8	200/150	171.1/124.8	200/150	430.8/336.8	200/150
	460-60	414	506	136.1/106.3	175/125	345.6/280.4	150/125	137.5/106.3	175/125	349.2/280.4	150/125	143.0/106.3	175/125	356.5/280.4	175/125
	575-60	518	633	110.3/ 85.2	125/110	279.1/227.4	125/100	111.4/ 85.2	125/110	282.0/227.4	125/100	116.2/ 85.2	150/110	287.8/227.4	125/100
120	208/230-60	187	253	317.5/306.2	400/400	763.5/748.4	350/350	320.5/306.2	400/400	771.4/748.4	350/350	332.2/306.2	400/400	787.6/748.4	400/350
	380-60	342	418	169.0/160.2	200/200	424.1/413.6	200/175	170.7/160.2	200/200	428.5/413.6	200/175	177.7/160.2	225/200	437.3/413.6	200/175
	460-60	414	506	141.5/135.2	175/175	351.0/343.2	175/150	142.9/135.2	175/175	354.6/343.2	175/150	148.4/135.2	175/175	361.9/343.2	175/150
	575-60	518	633	114.6/110.2	125/125	283.4/277.8	125/125	115.7/110.2	125/125	286.3/277.8	125/125	120.5/110.2	150/125	292.1/277.8	150/125
130	208/230-60	187	253	423.7/243.8	500/300	869.6/635.0	450/300	426.7/243.8	500/300	877.6/635.0	500/300	438.4/243.8	500/300	893.7/635.0	500/300
	380-60	342	418	224.8/124.8	250/150	479.9/336.8	250/150	226.5/124.8	250/150	484.3/336.8	250/150	233.5/124.8	250/150	493.1/336.8	250/150
	460-60	414	506	188.5/106.3	225/125	398.0/280.4	200/125	189.9/106.3	225/125	401.6/280.4	225/125	195.4/106.3	225/125	408.9/280.4	225/125
	575-60	518	633	152.8/ 85.2	175/110	321.6/227.4	175/100	153.9/ 85.2	175/110	324.5/227.4	175/100	158.7/ 85.2	175/110	330.4/227.4	175/100
150	208/230-60	187	253	423.7/306.2	500/400	869.6/748.4	450/350	426.7/306.2	500/400	877.6/748.4	500/350	438.4/306.2	500/400	893.7/748.4	500/350
	380-60	342	418	224.8/160.2	250/200	479.9/413.6	250/175	226.5/160.2	250/200	484.3/413.6	250/175	233.5/160.2	250/200	493.1/413.6	250/175
	460-60	414	506	188.5/135.2	225/175	398.0/343.2	200/150	189.9/135.2	225/175	401.6/343.2	225/150	195.4/135.2	225/175	408.9/343.2	225/150
	575-60	518	633	152.8/110.2	175/125	321.6/277.8	175/125	153.9/110.2	175/125	324.5/277.8	175/125	158.7/110.2	175/125	330.4/277.8	175/125
160	208/230-60	187	253	541.8/243.8	600/300	987.7/635.0	600/300	544.8/243.8	600/300	995.6/635.0	600/300	556.5/243.8	600/300	1011.8/635.0	600/300
	380-60	342	418	287.2/124.8	300/150	542.3/336.8	300/150	288.9/124.8	300/150	546.7/336.8	300/150	295.9/124.8	300/150	555.5/336.8	350/150
	460-60	414	506	240.9/106.3	250/125	450.4/280.4	250/125	242.3/106.3	250/125	454.0/280.4	250/125	247.8/106.3	250/125	461.3/280.4	300/125
	575-60	518	633	195.4/ 85.2	225/110	364.2/227.4	225/100	196.5/ 85.2	225/110	367.1/227.4	225/100	201.3/ 85.2	225/110	372.9/227.4	225/100
170	208/230-60	187	253	541.8/306.2	600/400	987.7/748.4	600/350	544.8/306.2	600/400	995.6/748.4	600/350	556.5/306.2	600/400	1011.8/748.4	600/350
	380-60	342	418	287.2/160.2	300/200	542.3/413.6	300/175	288.9/160.2	300/200	546.7/413.6	300/175	295.9/160.2	350/200	555.5/413.6	350/175
	460-60	414	506	240.9/135.2	250/175	450.4/343.2	250/150	242.3/135.2	250/175	454.0/343.2	250/150	247.8/135.2	250/175	461.3/343.2	300/150
	575-60	518	633	195.4/110.2	225/125	364.2/277.8	225/125	196.5/110.2	225/125	367.1/277.8	225/125	201.3/110.2	225/125	372.9/277.8	225/125
190	208/230-60	187	253	565.7/400.4	600/450	1011.6/842.6	600/450	568.7/400.4	600/450	1019.5/842.6	600/450	580.4/400.4	600/450	1035.7/842.6	600/450
	380-60	342	418	300.3/209.5	350/250	555.4/462.9	350/225	302.0/209.5	350/250	559.7/462.9	350/225	309.0/209.5	350/250	568.6/462.9	350/225
	460-60	414	506	251.7/176.8	300/200	461.2/384.8	300/200	253.1/176.8	300/200	464.8/384.8	300/200	258.6/176.8	300/200	472.1/384.8	300/200
	575-60	518	633	204.0/144.1	225/175	372.8/311.7	225/175	205.1/144.1	225/175	375.7/311.7	225/175	209.9/144.1	225/175	381.5/311.7	225/175

LEGEND

AWG — American Wire Gage
ICF — Instantaneous Current Flow (Ckt1/Ckt2)
MCA — Minimum Circuit Amps (Ckt1/Ckt2)
MOCP — Maximum Overcurrent Protection (Ckt1/Ckt2)
XL — Across-the-Line Start

NOTES:

1. Units are suitable for use on electrical systems where voltage supplied to the unit terminals is not below or above the listed minimum and maximum limits. Maximum allowable phase imbalance is: voltage, 2%; amps 10%.
2. Control power is derived from main power. No separate control power connection is required.
3. Cooler heater is wired into the control circuit so it is always operable as long as the power supply disconnect is on, even if any safety device is open.
4. For MCA that is less than or equal to 380 amps, 3 conductors are required.
   For MCA between 381-760 amps, 6 conductors are required.
   For MCA between 761-1140 amps, 9 conductors are required.
   For MCA between 1141-1520 amps, 12 conductors are required.
   Calculation of conductors required is based on 75 C copper wire.
5. Wiring for main field supply must be rated 75 C minimum. Use copper for all units.
   a. Incoming wire size range for the terminal block is no. 4 AWG to 500 kcmil.
   b. Incoming wire size range of non-fused disconnect with MCA up to 599.9 amps is 3/0 to 500 kcmil.
   c. Incoming wire size range of non-fused disconnect with MCA from 600 to 799.9 amps is 1/0 to 500 kcmil.
   d. Incoming wire size range of non-fused disconnect with MCA from 800 to 1199.9 amps is 250 kcmil to 500 kcmil.
6. Hydronic pump packages are not available as a factory-installed option for units 30RB210-390.
7. Power draw includes both crankcase heaters and cooler heaters (where used). Each compressor has a crankcase heater which draws 56 watts of power. Units ordered with the cooler heater option have 1 (060-150) or 2 (160-300) cooler heaters, 825 watts each.

ETL C LISTED ®
208/230
460
575 v only

Table 11B — 30RB210-390 Electrical Data — Dual Point Units

UNIT 30RB	UNIT VOLTAGE			NO HYDRONIC PACKAGE				3 HP PUMP, 1750 RPM				5 HP PUMP, 1750 RPM			
	V-Hz (3 Ph)	Supplied		MCA	MOCP	ICF	Rec Fuse Size	MCA	MOCP	ICF	Rec Fuse Size	MCA	MOCP	ICF	Rec Fuse Size
		Min	Max	XL	XL	XL		XL	XL	XL		XL	XL	XL	
210	208/230-60	187	253	626.7/353.9	700/400	1068.9/796.2	700/400	—	—	—	—	—	—	—	—
	380-60	342	418	327.7/186.4	350/225	581.1/439.7	350/200	—	—	—	—	—	—	—	—
	460-60	414	506	233.3/200.0	250/225	441.3/408.0	250/225	—	—	—	—	—	—	—	—
	575-60	518	633	188.8/162.0	200/175	356.4/329.6	200/175	—	—	—	—	—	—	—	—
225	208/230-60	187	253	684.3/353.9	700/400	1126.5/796.2	700/400	—	—	—	—	—	—	—	—
	380-60	342	418	360.4/186.4	400/225	613.8/439.7	400/200	—	—	—	—	—	—	—	—
	460-60	414	506	260.0/200.0	300/225	468.0/408.0	300/225	—	—	—	—	—	—	—	—
	575-60	518	633	211.9/162.0	225/175	379.5/329.6	225/175	—	—	—	—	—	—	—	—
250	208/230-60	187	253	684.3/472.0	700/500	1126.5/914.3	700/500	—	—	—	—	—	—	—	—
	380-60	342	418	360.4/248.7	400/250	613.8/502.1	400/250	—	—	—	—	—	—	—	—
	460-60	414	506	303.2/209.2	350/250	511.2/417.2	350/225	—	—	—	—	—	—	—	—
	575-60	518	633	246.4/170.0	250/200	414.1/337.6	250/200	—	—	—	—	—	—	—	—
275	208/230-60	187	253	920.5/353.9	1000/400	1362.7/796.2	1000/400	—	—	—	—	—	—	—	—
	380-60	342	418	485.2/186.4	500/225	738.5/439.7	500/200	—	—	—	—	—	—	—	—
	460-60	414	506	408.0/156.8	450/175	616.0/364.8	450/175	—	—	—	—	—	—	—	—
	575-60	518	633	331.5/127.5	350/150	499.1/295.1	350/150	—	—	—	—	—	—	—	—
300	208/230-60	187	253	920.5/472.0	1000/500	1362.7/914.3	1000/500	—	—	—	—	—	—	—	—
	380-60	342	418	485.2/248.7	500/250	738.5/502.1	500/250	—	—	—	—	—	—	—	—
	460-60	414	506	408.0/209.2	450/250	616.0/417.2	450/225	—	—	—	—	—	—	—	—
	575-60	518	633	331.5/170.0	350/200	499.1/337.6	350/200	—	—	—	—	—	—	—	—
315A	208/230-60	187	253	519.8/243.8	600/300	962.0/635.0	600/300	—	—	—	—	—	—	—	—
	380-60	342	418	274.9/124.8	300/150	528.3/336.8	300/150	—	—	—	—	—	—	—	—
	460-60	414	506	230.8/106.3	250/125	438.8/280.4	250/125	—	—	—	—	—	—	—	—
	575-60	518	633	187.3/ 85.2	200/110	354.9/227.4	200/100	—	—	—	—	—	—	—	—
315B	208/230-60	187	253	519.8/243.8	600/300	962.0/635.0	600/300	—	—	—	—	—	—	—	—
	460-60	414	506	230.8/106.3	250/125	438.8/280.4	250/125	—	—	—	—	—	—	—	—
	575-60	518	633	187.3/ 85.2	200/110	354.9/227.4	200/100	—	—	—	—	—	—	—	—
	380-60	342	418	274.9/124.8	300/150	528.3/336.8	300/150	—	—	—	—	—	—	—	—
330A	208/230-60	187	253	519.8/306.2	600/400	962.0/748.4	600/350	—	—	—	—	—	—	—	—
	380-60	342	418	274.9/160.2	300/200	528.3/413.6	300/175	—	—	—	—	—	—	—	—
	460-60	414	506	230.8/135.2	250/175	438.8/343.2	250/150	—	—	—	—	—	—	—	—
	575-60	518	633	187.3/110.2	200/125	354.9/277.8	200/125	—	—	—	—	—	—	—	—
330B	208/230-60	187	253	519.8/243.8	600/300	962.0/635.0	600/300	—	—	—	—	—	—	—	—
	380-60	342	418	274.9/124.8	300/150	528.3/336.8	300/150	—	—	—	—	—	—	—	—
	460-60	414	506	230.8/106.3	250/125	438.8/280.4	250/125	—	—	—	—	—	—	—	—
	575-60	518	633	187.3/ 85.2	200/110	354.9/227.4	200/100	—	—	—	—	—	—	—	—
345A	208/230-60	187	253	519.8/306.2	600/400	962.0/748.4	600/350	—	—	—	—	—	—	—	—
	380-60	342	418	274.9/160.2	300/200	528.3/413.6	300/175	—	—	—	—	—	—	—	—
	460-60	414	506	230.8/135.2	250/175	438.8/343.2	250/150	—	—	—	—	—	—	—	—
	575-60	518	633	187.3/110.2	200/125	354.9/277.8	200/125	—	—	—	—	—	—	—	—
345B	208/230-60	187	253	519.8/306.2	600/400	962.0/748.4	600/350	—	—	—	—	—	—	—	—
	380-60	342	418	274.9/160.2	300/200	528.3/413.6	300/175	—	—	—	—	—	—	—	—
	460-60	414	506	230.8/135.2	250/175	438.8/343.2	250/150	—	—	—	—	—	—	—	—
	575-60	518	633	187.3/110.2	200/125	354.9/277.8	200/125	—	—	—	—	—	—	—	—
360A	208/230-60	187	253	543.7/400.4	600/450	985.9/842.6	600/450	—	—	—	—	—	—	—	—
	380-60	342	418	288.0/209.5	300/250	541.3/462.9	300/225	—	—	—	—	—	—	—	—
	460-60	414	506	241.6/176.8	250/200	449.6/384.8	250/200	—	—	—	—	—	—	—	—
	575-60	518	633	195.9/144.1	225/175	363.5/311.7	225/175	—	—	—	—	—	—	—	—
360B	208/230-60	187	253	519.8/306.2	600/400	962.0/748.4	600/350	—	—	—	—	—	—	—	—
	380-60	342	418	274.9/160.2	300/200	528.3/413.6	300/175	—	—	—	—	—	—	—	—
	460-60	414	506	230.8/135.2	250/175	438.8/343.2	250/150	—	—	—	—	—	—	—	—
	575-60	518	633	187.3/110.2	200/125	354.9/277.8	200/125	—	—	—	—	—	—	—	—
390A	208/230-60	187	253	543.7/400.4	600/450	985.9/842.6	600/450	—	—	—	—	—	—	—	—
	380-60	342	418	288.0/209.5	300/250	541.3/462.9	300/225	—	—	—	—	—	—	—	—
	460-60	414	506	241.6/176.8	250/200	449.6/384.8	250/200	—	—	—	—	—	—	—	—
	575-60	518	633	195.9/144.1	225/175	363.5/311.7	225/175	—	—	—	—	—	—	—	—
390B	208/230-60	187	253	543.7/400.4	600/450	985.9/842.6	600/450	—	—	—	—	—	—	—	—
	380-60	342	418	288.0/209.5	300/250	541.3/462.9	300/225	—	—	—	—	—	—	—	—
	460-60	414	506	241.6/176.8	250/200	449.6/384.8	250/200	—	—	—	—	—	—	—	—
	575-60	518	633	195.9/144.1	225/175	363.5/311.7	225/175	—	—	—	—	—	—	—	—

LEGEND

AWG — American Wire Gage
ICF — Instantaneous Current Flow (Ckt1/Ckt2)
MCA — Minimum Circuit Amps (Ckt1/Ckt2)
MOCP — Maximum Overcurrent Protection (Ckt1/Ckt2)
XL — Across-the-Line Start

NOTES:

1. Units are suitable for use on electrical systems where voltage supplied to the unit terminals is not below or above the listed minimum and maximum limits. Maximum allowable phase imbalance is: voltage, 2%; amps 10%.
2. Control power is derived from main power. No separate control power connection is required.
3. Cooler heater is wired into the control circuit so it is always operable as long as the power supply disconnect is on, even if any safety device is open.
4. For MCA that is less than or equal to 380 amps, 3 conductors are required.
   For MCA between 381-760 amps, 6 conductors are required.
   For MCA between 761-1140 amps, 9 conductors are required.
   For MCA between 1141-1520 amps, 12 conductors are required.
   Calculation of conductors required is based on 75 C copper wire.
5. Wiring for main field supply must be rated 75 C minimum. Use copper for all units.
   a. Incoming wire size range for the terminal block is no. 4 AWG to 500 kcmil.
   b. Incoming wire size range of non-fused disconnect with MCA up to 599.9 amps is 3/0 to 500 kcmil.
   c. Incoming wire size range of non-fused disconnect with MCA from 600 to 799.9 amps is 1/0 to 500 kcmil.
   d. Incoming wire size range of non-fused disconnect with MCA from 800 to 1199.9 amps is 250 kcmil to 500 kcmil.
6. Hydronic pump packages are not available as a factory-installed option for units 30RB210-390.
7. Power draw includes both crankcase heaters and cooler heaters (where used). Each compressor has a crankcase heater which draws 56 watts of power. Units ordered with the cooler heater option have 1 (060-150) or 2 (160-300) cooler heaters, 825 watts each.

208/230
460
575 v only

Table 12 — Condenser Fan Electrical Data

UNIT 30RB	UNIT VOLTAGE V-Hz (3 Ph)	STANDARD CONDENSER FANS					
		Circuit A Quantity	FLA (each)	Circuit B Quantity	FLA (each)	Circuit C Quantity	FLA (each)
060, 070	208/230-60	3	11.9	1	11.9	—	—
	380-60	3	6.5	1	6.5	—	—
	460-60	3	5.4	1	5.4	—	—
	575-60	3	4.3	1	4.3	—	—
080	208/230-60	2	11.9	2	11.9	—	—
	380-60	2	6.5	2	6.5	—	—
	460-60	2	5.4	2	5.4	—	—
	575-60	2	4.3	2	4.3	—	—
090, 100, 110	208/230-60	3	11.9	3	11.9	—	—
	380-60	3	6.5	3	6.5	—	—
	460-60	3	5.4	3	5.4	—	—
	575-60	3	4.3	3	4.3	—	—
120	208/230-60	3	11.9	4	11.9	—	—
	380-60	3	6.5	4	6.5	—	—
	460-60	3	5.4	4	5.4	—	—
	575-60	3	4.3	4	4.3	—	—
130, 150	208/230-60	4	11.9	4	11.9	—	—
	380-60	4	6.5	4	6.5	—	—
	460-60	4	5.4	4	5.4	—	—
	575-60	4	4.3	4	4.3	—	—
160,170, 315A, 315B, 330A, 330B, 345A, 345B, 360B	208/230-60	6	11.9	4	11.9	—	—
	380-60	6	6.5	4	6.5	—	—
	460-60	6	5.4	4	5.4	—	—
	575-60	6	4.3	4	4.3	—	—
190, 360A, 390A, 390B	208/230-60	6	11.9	6	11.9	—	—
	380-60	6	6.5	6	6.5	—	—
	460-60	6	5.4	6	5.4	—	—
	575-60	6	4.3	6	4.3	—	—
210, 225	208/230-60	4	11.9	4	11.9	4	11.9
	380-60	4	6.5	4	6.5	4	6.5
	460-60	4	5.4	4	5.4	4	5.4
	575-60	4	4.3	4	4.3	4	4.3
250	208/230-60	4	11.9	4	11.9	6	11.9
	380-60	4	6.5	4	6.5	6	6.5
	460-60	4	5.4	4	5.4	6	5.4
	575-60	4	4.3	4	4.3	6	4.3
275	208/230-60	6	11.9	6	11.9	4	11.9
	380-60	6	6.5	6	6.5	4	6.5
	460-60	6	5.4	6	5.4	4	5.4
	575-60	6	4.3	6	4.3	4	4.3
300	208/230-60	6	11.9	6	11.9	6	11.9
	380-60	6	6.5	6	6.5	6	6.5
	460-60	6	5.4	6	5.4	6	5.4
	575-60	6	4.3	6	4.3	6	4.3

LEGEND
FLA — Full Load Amps

Table 13 — Pump Electrical Data

PUMP HP	UNIT VOLTAGE V-Hz (3 Ph)	HYDRONIC SYSTEM (SINGLE/DUAL) FLA (each)	USED ON 30RB SIZES*
3	208/230-60	9.1	060, 070
	380-60	5.1	
	460-60	4.2	
	575-60	3.3	
5	208/230-60	15.4	060-190
	380-60	8.1	
	460-60	7.1	
	575-60	5.4	
7.5	208/230-60	22.0	060-190
	380-60	12.3	
	460-60	10.1	
	575-60	8.1	
10	208/230-60	25.0	060-190
	380-60	14.0	
	460-60	11.5	
	575-60	9.2	
15	208/230-60	36.7	080-190
	380-60	21.0	
	460-60	17.0	
	575-60	14.0	

LEGEND
FLA — Full Load Amps

*Hydronic pump packages are not available as a factory-installed option for units 30RB210-390.

Table 14 — Compressor Electrical Data

UNIT 30RB	UNIT VOLTAGE V-Hz (3 Ph)	COMPRESSOR A1		COMPRESSOR A2		COMPRESSOR A3		COMPRESSOR A4		COMPRESSOR B1		COMPRESSOR B2		COMPRESSOR B3		COMPRESSOR B4		COMPRESSOR C1		COMPRESSOR C2		COMPRESSOR C3		COMPRESSOR C4	
		RLA	LRA	RLA	LRA	RLA	LRA	RLA	LRA	RLA	LRA	RLA	LRA	RLA	LRA	RLA	LRA	RLA	LRA	RLA	LRA	RLA	LRA	RLA	LRA
060	208/230-60	75.0	485	75.0	485	—	—	—	—	75.0	485	—	—	—	—	—	—	—	—	—	—	—	—	—	—
	380-60	38.4	260	38.4	260	—	—	—	—	38.4	260	—	—	—	—	—	—	—	—	—	—	—	—	—	—
	460-60	32.7	215	32.7	215	—	—	—	—	32.7	215	—	—	—	—	—	—	—	—	—	—	—	—	—	—
	575-60	26.2	175	26.2	175	—	—	—	—	26.2	175	—	—	—	—	—	—	—	—	—	—	—	—	—	—
070	208/230-60	94.2	560	94.2	560	—	—	—	—	75.0	485	—	—	—	—	—	—	—	—	—	—	—	—	—	—
	380-60	49.3	315	49.3	315	—	—	—	—	38.4	260	—	—	—	—	—	—	—	—	—	—	—	—	—	—
	460-60	41.6	260	41.6	260	—	—	—	—	32.7	215	—	—	—	—	—	—	—	—	—	—	—	—	—	—
	575-60	33.9	210	33.9	210	—	—	—	—	26.2	175	—	—	—	—	—	—	—	—	—	—	—	—	—	—
080	208/230-60	75.0	485	75.0	485	—	—	—	—	75.0	485	75.0	485	—	—	—	—	—	—	—	—	—	—	—	—
	380-60	38.4	260	38.4	260	—	—	—	—	38.4	260	38.4	260	—	—	—	—	—	—	—	—	—	—	—	—
	460-60	32.7	215	32.7	215	—	—	—	—	32.7	215	32.7	215	—	—	—	—	—	—	—	—	—	—	—	—
	575-60	26.2	175	26.2	175	—	—	—	—	26.2	175	26.2	175	—	—	—	—	—	—	—	—	—	—	—	—
090	208/230-60	94.2	560	94.2	560	—	—	—	—	75.0	485	75.0	485	—	—	—	—	—	—	—	—	—	—	—	—
	380-60	49.3	315	49.3	315	—	—	—	—	38.4	260	38.4	260	—	—	—	—	—	—	—	—	—	—	—	—
	460-60	41.6	260	41.6	260	—	—	—	—	32.7	215	32.7	215	—	—	—	—	—	—	—	—	—	—	—	—
	575-60	33.9	210	33.9	210	—	—	—	—	26.2	175	26.2	175	—	—	—	—	—	—	—	—	—	—	—	—
100	208/230-60	94.2	560	94.2	560	—	—	—	—	94.2	560	94.2	560	—	—	—	—	—	—	—	—	—	—	—	—
	380-60	49.3	315	49.3	315	—	—	—	—	49.3	315	49.3	315	—	—	—	—	—	—	—	—	—	—	—	—
	460-60	41.6	260	41.6	260	—	—	—	—	41.6	260	41.6	260	—	—	—	—	—	—	—	—	—	—	—	—
	575-60	33.9	210	33.9	210	—	—	—	—	33.9	210	33.9	210	—	—	—	—	—	—	—	—	—	—	—	—
110	208/230-60	94.2	560	94.2	560	—	—	—	—	75.0	485	75.0	485	75.0	485	—	—	—	—	—	—	—	—	—	—
	380-60	49.3	315	49.3	315	—	—	—	—	38.4	260	38.4	260	38.4	260	—	—	—	—	—	—	—	—	—	—
	460-60	41.6	260	41.6	260	—	—	—	—	32.7	215	32.7	215	32.7	215	—	—	—	—	—	—	—	—	—	—
	575-60	33.9	210	33.9	210	—	—	—	—	26.2	175	26.2	175	26.2	175	—	—	—	—	—	—	—	—	—	—
120	208/230-60	94.2	560	94.2	560	—	—	—	—	94.2	560	94.2	560	94.2	560	—	—	—	—	—	—	—	—	—	—
	380-60	49.3	315	49.3	315	—	—	—	—	49.3	315	49.3	315	49.3	315	—	—	—	—	—	—	—	—	—	—
	460-60	41.6	260	41.6	260	—	—	—	—	41.6	260	41.6	260	41.6	260	—	—	—	—	—	—	—	—	—	—
	575-60	33.9	210	33.9	210	—	—	—	—	33.9	210	33.9	210	33.9	210	—	—	—	—	—	—	—	—	—	—
130	208/230-60	94.2	560	94.2	560	94.2	560	—	—	75.0	485	75.0	485	75.0	485	—	—	—	—	—	—	—	—	—	—
	380-60	49.3	315	49.3	315	49.3	315	—	—	38.4	260	38.4	260	38.4	260	—	—	—	—	—	—	—	—	—	—
	460-60	41.6	260	41.6	260	41.6	260	—	—	32.7	215	32.7	215	32.7	215	—	—	—	—	—	—	—	—	—	—
	575-60	33.9	210	33.9	210	33.9	210	—	—	26.2	175	26.2	175	26.2	175	—	—	—	—	—	—	—	—	—	—
150	208/230-60	94.2	560	94.2	560	94.2	560	—	—	94.2	560	94.2	560	94.2	560	—	—	—	—	—	—	—	—	—	—
	380-60	49.3	315	49.3	315	49.3	315	—	—	49.3	315	49.3	315	49.3	315	—	—	—	—	—	—	—	—	—	—
	460-60	41.6	260	41.6	260	41.6	260	—	—	41.6	260	41.6	260	41.6	260	—	—	—	—	—	—	—	—	—	—
	575-60	33.9	210	33.9	210	33.9	210	—	—	33.9	210	33.9	210	33.9	210	—	—	—	—	—	—	—	—	—	—
160, 315A, 315B, 330B	208/230-60	94.2	560	94.2	560	94.2	560	94.2	560	75.0	485	75.0	485	75.0	485	—	—	—	—	—	—	—	—	—	—
	380-60	49.3	315	49.3	315	49.3	315	49.3	315	38.4	260	38.4	260	38.4	260	—	—	—	—	—	—	—	—	—	—
	460-60	41.6	260	41.6	260	41.6	260	41.6	260	32.7	215	32.7	215	32.7	215	—	—	—	—	—	—	—	—	—	—
	575-60	33.9	210	33.9	210	33.9	210	33.9	210	26.2	175	26.2	175	26.2	175	—	—	—	—	—	—	—	—	—	—
170, 330A, 345A, 345B, 360B	208/230-60	94.2	560	94.2	560	94.2	560	94.2	560	94.2	560	94.2	560	94.2	560	—	—	—	—	—	—	—	—	—	—
	380-60	49.3	315	49.3	315	49.3	315	49.3	315	49.3	315	49.3	315	49.3	315	—	—	—	—	—	—	—	—	—	—
	460-60	41.6	260	41.6	260	41.6	260	41.6	260	41.6	260	41.6	260	41.6	260	—	—	—	—	—	—	—	—	—	—
	575-60	33.9	210	33.9	210	33.9	210	33.9	210	33.9	210	33.9	210	33.9	210	—	—	—	—	—	—	—	—	—	—
190, 360A, 390A, 390B	208/230-60	94.2	560	94.2	560	94.2	560	94.2	560	94.2	560	94.2	560	94.2	560	94.2	560	—	—	—	—	—	—	—	—
	380-60	49.3	315	49.3	315	49.3	315	49.3	315	49.3	315	49.3	315	49.3	315	49.3	315	—	—	—	—	—	—	—	—
	460-60	41.6	260	41.6	260	41.6	260	41.6	260	41.6	260	41.6	260	41.6	260	41.6	260	—	—	—	—	—	—	—	—
	575-60	33.9	210	33.9	210	33.9	210	33.9	210	33.9	210	33.9	210	33.9	210	33.9	210	—	—	—	—	—	—	—	—
210	208/230-60	94.2	560	94.2	560	94.2	560	—	—	75.0	485	75.0	485	75.0	485	—	—	94.2	560	94.2	560	94.2	560	—	—
	380-60	49.3	315	49.3	315	49.3	315	—	—	38.4	260	38.4	260	38.4	260	—	—	49.3	315	49.3	315	49.3	315	—	—
	460-60	41.6	260	41.6	260	41.6	260	—	—	32.7	215	32.7	215	32.7	215	—	—	41.6	260	41.6	260	41.6	260	—	—
	575-60	33.9	210	33.9	210	33.9	210	—	—	26.2	175	26.2	175	26.2	175	—	—	33.9	210	33.9	210	33.9	210	—	—
225	208/230-60	94.2	560	94.2	560	94.2	560	—	—	94.2	560	94.2	560	94.2	560	—	—	94.2	560	94.2	560	94.2	560	—	—
	380-60	49.3	315	49.3	315	49.3	315	—	—	49.3	315	49.3	315	49.3	315	—	—	49.3	315	49.3	315	49.3	315	—	—
	460-60	41.6	260	41.6	260	41.6	260	—	—	41.6	260	41.6	260	41.6	260	—	—	41.6	260	41.6	260	41.6	260	—	—
	575-60	33.9	210	33.9	210	33.9	210	—	—	33.9	210	33.9	210	33.9	210	—	—	33.9	210	33.9	210	33.9	210	—	—
250	208/230-60	94.2	560	94.2	560	94.2	560	—	—	94.2	560	94.2	560	94.2	560	—	—	94.2	560	94.2	560	94.2	560	94.2	560
	380-60	49.3	315	49.3	315	49.3	315	—	—	49.3	315	49.3	315	49.3	315	—	—	49.3	315	49.3	315	49.3	315	49.3	315
	460-60	41.6	260	41.6	260	41.6	260	—	—	41.6	260	41.6	260	41.6	260	—	—	41.6	260	41.6	260	41.6	260	41.6	260
	575-60	33.9	210	33.9	210	33.9	210	—	—	33.9	210	33.9	210	33.9	210	—	—	33.9	210	33.9	210	33.9	210	33.9	210
275	208/230-60	94.2	560	94.2	560	94.2	560	94.2	560	94.2	560	94.2	560	94.2	560	94.2	560	94.2	560	94.2	560	94.2	560	—	—
	380-60	49.3	315	49.3	315	49.3	315	49.3	315	49.3	315	49.3	315	49.3	315	49.3	315	49.3	315	49.3	315	49.3	315	—	—
	460-60	41.6	260	41.6	260	41.6	260	41.6	260	41.6	260	41.6	260	41.6	260	41.6	260	41.6	260	41.6	260	41.6	260	—	—
	575-60	33.9	210	33.9	210	33.9	210	33.9	210	33.9	210	33.9	210	33.9	210	33.9	210	33.9	210	33.9	210	33.9	210	—	—
300	208/230-60	94.2	560	94.2	560	94.2	560	94.2	560	94.2	560	94.2	560	94.2	560	94.2	560	94.2	560	94.2	560	94.2	560	94.2	560
	380-60	49.3	315	49.3	315	49.3	315	49.3	315	49.3	315	49.3	315	49.3	315	49.3	315	49.3	315	49.3	315	49.3	315	49.3	315
	460-60	41.6	260	41.6	260	41.6	260	41.6	260	41.6	260	41.6	260	41.6	260	41.6	260	41.6	260	41.6	260	41.6	260	41.6	260
	575-60	33.9	210	33.9	210	33.9	210	33.9	210	33.9	210	33.9	210	33.9	210	33.9	210	33.9	210	33.9	210	33.9	210	33.9	210

LEGEND

LRA — Locked Rotor Amps
RLA — Rated Load Amps

CARRIER COMFORT NETWORK® (CCN) COMMUNICATION BUS WIRING — The communication bus wiring is a shielded, 3-conductor cable with drain wire and is field supplied and installed in the field.

The system elements are connected to the communication bus in a daisy chain arrangement. The positive pin of each system element communication connector must be wired to the positive pins of the system elements on either side of it. This is also required for the negative and signal ground pins of each system element. Wiring connections for CCN should be made at TB 3 (terminal block). Consult the CCN Contractor's Manual for further information. See Fig. 62.

NOTE: Conductors and drain wire must be 20 AWG (American Wire Gage) minimum stranded, tinned copper. Individual conductors must be insulated with PVC, PVC/nylon, vinyl, Teflon*, or polyethylene. An aluminum/polyester 100% foil shield and an outer jacket of PVC, PVC/nylon, chrome vinyl, or Teflon with a minimum operating temperature range of –4 F (–20 C) to 140 F (60 C) is required. Refer to Table 15 for a list of manufacturers that produce CCN bus wiring that meets these requirements.

Table 15 — CCN Communication Bus Wiring

MANUFACTURER	PART NUMBER	
	Regular Wiring	Plenum Wiring
Alpha	1895	—
American	A21451	A48301
Belden	8205	884421
Columbia	D6451	—
Manhatten	M13402	M64430
Quabik	6130	—

It is important when connecting to a CCN communication bus that a color coding scheme be used for the entire network to simplify the installation. It is recommended that red be used for the signal positive, black for the signal negative, and white for the signal ground. Use a similar scheme for cables containing different colored wires. At each system element, the shields of its communication bus cables must be tied together. If the communication bus is entirely within one building, the resulting continuous shield must be connected to a ground at one point only. If the communication bus cable exits from one building and enters another, the shields must be connected to grounds at the lightning suppressor in each building where the cable enters or exits the building (one point per building only).

To connect the unit to the network:

1. Turn off power to the control box.
2. Cut the CCN wire and strip the ends of the red (+), white (ground), and black (–) conductors. Substitute appropriate colors for different colored cables.
3. Connect the red wire to (+) terminal on TB3 of the plug, the white wire to COM terminal, and the black wire to the (–) terminal.
4. The RJ14 CCN connector on TB3 can also be used, but is only intended for temporary connection (for example, a laptop computer running Service Tool).

> IMPORTANT: A shorted CCN bus cable will prevent some routines from running and may prevent the unit from starting. If abnormal conditions occur, disconnect the machine from the CCN network. If conditions return to normal, check the CCN connector and cable. Run new cable if necessary. A short in one section of the bus can cause problems with all system elements on the bus.

NON-CCN COMMUNICATION WIRING — The 30RB units offer several non-CCN translators. Refer to the separate installation instructions for additional wiring steps.

Step 7 — Install Accessories — A number of accessories are available to provide the following optional features (for details, refer to the Controls, Start-Up, Operation, Service and Troubleshooting guide).

Energy management module is used for any of the following types of temperature reset, demand limit and ice features:

- 4 to 20 mA inputs for cooling set point reset and capacity limit (requires field-supplied 4 to 20 mA generator)
- 0 to 10 v output for percentage total capacity running
- 24 v discrete outputs for shutdown and running relays
- 10k space temperature input
- Discrete inputs for occupancy override, demand limit switch 2 (step 1 demand limit is wired to the base board, requires field-supplied dry contacts), remote lockout switch and ice done switch (requires field-supplied dry contacts)

NAVIGATOR™ DISPLAY — The Navigator display provides hand-held, mobile capability using easy to read 4-line display. Keypad function is the same as the scrolling marquee display. The Navigator display features a mounting magnet for 'hands free' service of components.

REMOTE ENHANCED DISPLAY — For applications where remote monitoring of the equipment is required, the remote enhanced display provides an indoor display capable of monitoring any equipment on the Carrier Comfort Network® (CCN) bus. A CCN bus is needed.

LOW AMBIENT TEMPERATURE OPERATION — If outdoor ambient operating temperatures below 32 F (0° C) are expected, refer to separate installation instructions for low ambient temperature operation using the low ambient temperature head pressure control accessory.

MINIMUM LOAD ACCESSORY — If minimum load accessory is required, contact your local Carrier representative for more details. For installation details, refer to separate installation instructions supplied with the accessory package.

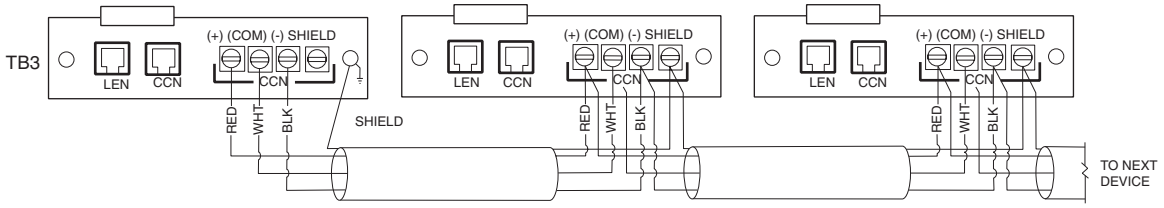

LEGEND
CCN — Carrier Comfort Network®
LEN — Local Equipment Network

Fig. 62 — TB-3 — CCN Wiring

* Registered trademark of DuPont.

UNIT SECURITY/PROTECTION ACCESSORIES — For applications with unique security and/or protection requirements, several options are available for unit protection. Compressor enclosures, security grilles and hail guards are available. Contact your local Carrier representative for more details. For installation details, refer to separate installation instructions supplied with the accessory package.

COMMUNICATION ACCESSORIES — A number of communication options are available to meet any requirement. Contact your local Carrier representative for more details. For installation details, refer to separate installation instructions supplied with the accessory package.

SERVICE OPTIONS — Two additional accessories are offered to aid in servicing 30RB units, a ground fault convenience outlet (GFI-CO) and a remote service port. The remote service port is a weather-proof enclosure with a communication port to plug in the Navigator device. Contact your local Carrier representative for more details. For installation details, refer to separate installation instructions supplied with the accessory package.

Refrigerant Circuit

LEAK TESTING — Units are shipped with complete operating charge of R-410A (see Tables 3A-4B) and should be under sufficient pressure to conduct a leak test.

⚠ CAUTION

This system uses Puron® R-410A refrigerant, which has higher pressures than R-22 and other refrigerants. No other refrigerant can be used in this system. Failure to use gage set, hoses, and recovery systems designed to handle Puron refrigerant (R-410A) may result in equipment damage or personal injury. If unsure about equipment, consult the equipment manufacturer.

Perform a leak test to ensure that leaks have not developed during unit shipment. Dehydration of the system is not required unless the entire refrigerant charge has been lost. See Controls and Troubleshooting literature for specific torque requirements of refrigerant fittings. Repair any leak found using good refrigeration practice.

DEHYDRATION — Refer to Carrier Standard Service Techniques Manual, Chapter 1, Refrigerants, Sections 6 and 7 for details. Do not use compressor to evacuate system.

REFRIGERANT CHARGE (Refer to Tables 3A-4B) — Immediately ahead of filter drier in each circuit is a factory-installed liquid line service valve. Each valve has a $^1/_4$-in. Schrader connection for charging liquid refrigerant. Refer to Controls, Start-Up, Operation, Service and Troubleshooting Guide for more information.

⚠ CAUTION

When charging, circulate water through the cooler at all times to prevent freezing. Freezing damage is considered abuse and may impair or otherwise negatively affect the Carrier warranty.

⚠ CAUTION

DO NOT OVERCHARGE system. Overcharging results in higher discharge pressure possible compressor damage, and higher power consumption.

⚠ CAUTION

Refrigerant charge must be removed slowly to prevent loss of compressor oil that could result in compressor failure.

BACnet* Communication Option Wiring — The BACnet communication option uses the UPC Open controller. The controller communicates using BACnet on an MS/TP network segment communications at 9600 bps, 19.2 kbps, 38.4 kbps, or 76.8 kbps.

Wire the controllers on an MS/TP network segment in a daisy-chain configuration. Wire specifications for the cable are 22 AWG (American Wire Gage) or 24 AWG, low-capacitance, twisted, stranded, shielded copper wire. The maximum length is 2000 ft.

Install a BT485 terminator on the first and last controller on a network segment to add bias and prevent signal distortions due to echoing. See Fig. 63-65.

To wire the UPC Open controller to the BAS network:

1. Pull the screw terminal connector from the controller's BAS Port.
2. Check the communications wiring for shorts and grounds.
3. Connect the communications wiring to the BAS port's screw terminals labeled Net +, Net -, and Shield.

NOTE: Use the same polarity throughout the network segment.

4. Insert the power screw terminal connector into the UPC Open controller's power terminals if they are not currently connected.
5. Verify communication with the network by viewing a module status report. To perform a module status report using the BACview keypad/display unit, press and hold the "FN" key then press the "." Key.

To install a BT485 terminator, push the BT485, on to the BT485 connector located near the BACnet connector.

NOTE: The BT485 terminator has no polarity associated with it.

To order a BT485 terminator, consult Commercial Products i-Vu® Open Control System Master Prices.

MS/TP WIRING RECOMMENDATIONS — Recommendations are shown in Tables 16 and 17. The wire jacket and UL temperature rating specifications list two acceptable alternatives. The Halar specification has a higher temperature rating and a tougher outer jacket than the SmokeGard specification, and it is appropriate for use in applications where the user is concerned about abrasion. The Halar jacket is also less likely to crack in extremely low temperatures.

NOTE: Use the specified type of wire and cable for maximum signal integrity.

* Sponsored by ASHRAE (American Society of Heating, Refrigerating, and Air-Conditioning Engineers).

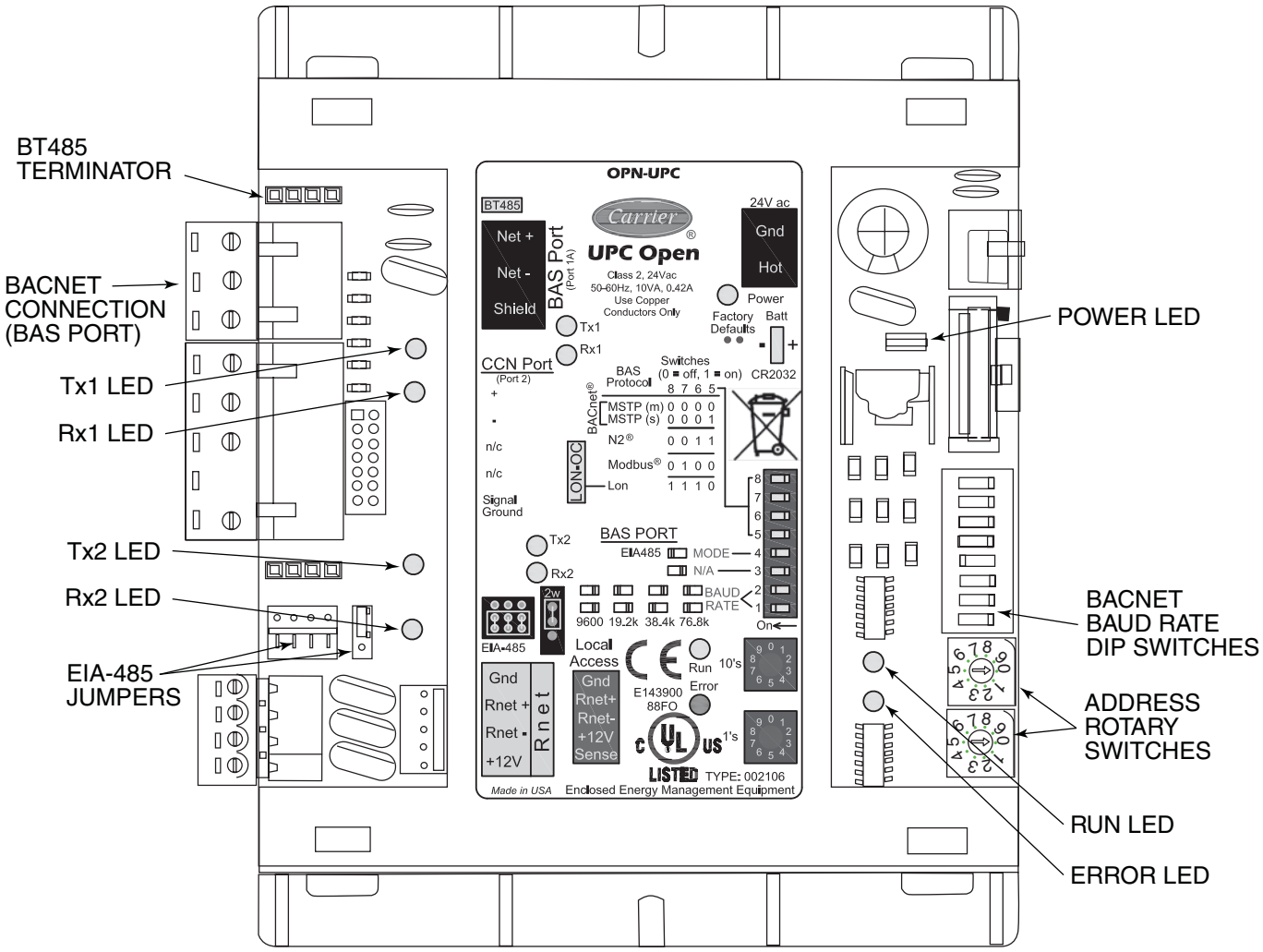

Fig. 63 — UPC Open Controller

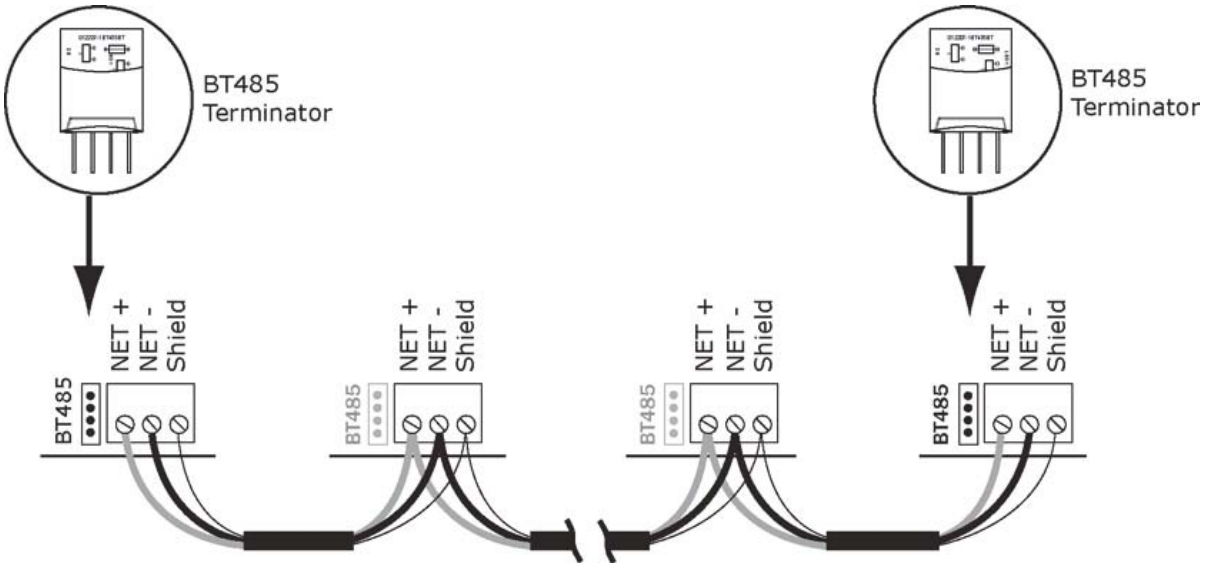

Fig. 64 — Network Wiring

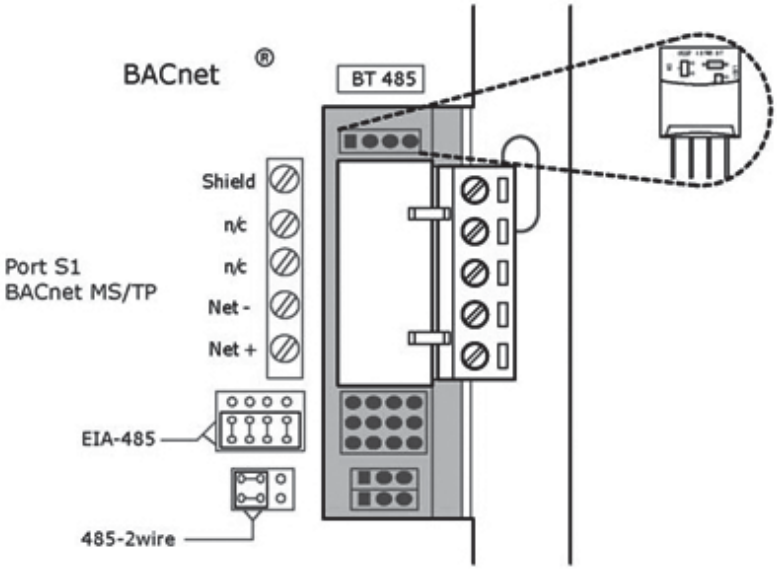

Fig. 65 — BT485 Terminator Installation

Table 16 — MS/TP Wiring Recommendations

SPECIFICATION	RECOMMMENDATION
Cable	Single twisted pair, low capacitance, CL2P, 22 AWG (7x30), TC foam FEP, plenum rated cable
Conductor	22 or 24 AWG stranded copper (tin plated)
Insulation	Foamed FEP 0.015 in. (0.381 mm) wall 0.060 in. (1.524 mm) O.D.
Color Code	Black/White
Twist Lay	2 in. (50.8 mm) lay on pair 6 twists/foot (20 twists/meter) nominal
Shielding	Aluminum/Mylar shield with 24 AWG TC drain wire
Jacket	SmokeGard Jacket (SmokeGard PVC) 0.021 in. (0.5334 mm) wall 0.175 in. (4.445 mm) O.D. Halar Jacket (E-CTFE) 0.010 in. (0.254 mm) wall 0.144 in. (3.6576 mm) O.D.
DC Resistance	15.2 Ohms/1000 feet (50 Ohms/km) nominal
Capacitance	12.5 pF/ft (41 pF/meter) nominal conductor to conductor
Characteristic Impedance	100 Ohms nominal
Weight	12 lb/1000 feet (17.9 kg/km)
UL Temperature Rating	SmokeGard 167°F (75°C), Halar -40 to 302°F (-40 to 150°C)
Voltage	300 Vac, power limited
Listing	UL: NEC CL2P, or better

LEGEND

AWG — American Wire Gage
CL2P — Class 2 Plenum Cable
DC — Direct Current
FEP — Fluorinated Ethylene Polymer
NEC — National Electrical Code
O.D. — Outside Diameter
TC — Tinned Copper
UL — Underwriters Laboratories

Table 17 — Open System Wiring Specifications and Recommended Vendors

WIRING SPECIFICATIONS		RECOMMENDED VENDORS AND PART NUMBERS			
Wire Type	**Description**	**Connect Air International**	**Belden**	**RMCORP**	**Contractors Wire and Cable**
MS/TP Network (RS-485)	22 AWG, single twisted shielded pair, low capacitance, CL2P, TC foam FEP, plenum rated. See MS/TP Installation Guide for specifications.	W221P-22227	—	25160PV	CLP0520LC
	24 AWG, single twisted shielded pair, low capacitance, CL2P, TC foam FEP, plenum rated. See MS/TP Installation Guide for specifications.	W241P-2000F	82841	25120-OR	—
Rnet	4 conductor, unshielded, CMP, 18 AWG, plenum rated.	W184C-2099BLB	6302UE	21450	CLP0442

LEGEND

AWG — American Wire Gage
CL2P — Class 2 Plenum Cable
CMP — Communications Plenum Rated
FEP — Fluorinated Ethylene Polymer
TC — Tinned Copper

© Carrier Corporation 2013

Manufacturer reserves the right to discontinue, or change at any time, specifications or designs without notice and without incurring obligations.

Catalog No. 04-53300124-01 Printed in U.S.A. Form 30RB-21SI Pg 76 12-13 Replaces: 30RB-20SI